U.S. Department of Transportation
Research and Special Programs Administration

400 Seventh St., S.W.
Washington, D.C. 20590

IAEA CERTIFICATE OF COMPETENT AUTHORITY
SPECIAL FORM RADIOACTIVE MATERIALS
CERTIFICATE NUMBER USA/0283/S, REVISION 4

This certifies that the source described has been demonstrated to meet the regulatory requirements for special form radioactive material as prescribed in the regulations of the International Atomic Energy Agency[1] and the United States of America[2] for the transport of radioactive materials.

1. Source Identification - 3M Model 3F1G capsules manufactured prior to August 3, 1989.

2. Source Description - Double encapsulation made of stainless steel and tungsten inert gas welded. Approximate outer dimensions are 19.1 mm (0.75 in.) in diameter and 10.2 mm (0.4 in.) in length. Construction shall be in accordance with attached 3M Drawing No. SM-B-509057 (3 pages).

3. Radioactive Contents - No more than 18.5 GBq (0.5 Ci) of Strontium-90 in the form of 3M Brand Radiating Microspheres.

4. Quality Assurance - Records of Quality Assurance activities required by Paragraph 310 of the IAEA regulations[1] shall be maintained and made available to the authorized officials for at least three years after the last shipment authorized by this certificate. Consignors and consignees in the United States exporting or importing shipments under this certificate shall satisfy the requirements of Subpart H of 10 CFR 71.

5. Expiration Date - This certificate expires July 31, 2008.

This certificate is issued in accordance with paragraph 804 of the IAEA Regulations and Section 173.476 of Title 49 of the Code of Federal Regulations, in response to the petition and information dated April 30, 2003 submitted by Department of the Army, Fort Monmouth, NJ, and in consideration of other information on file in this Office.

Certified by:

Robert A. McGuire
Associate Administrator for
Hazardous Materials Safety

AUG 12 2003
(DATE)

Revision 4 - Issued to extend the expiration date.

---

1 "Regulations for the Safe Transport of Radioactive Material, 1996 Edition (Revised), No. TS-R-1 (ST-1, Revised)," published by the International Atomic Energy Agency (IAEA), Vienna, Austria.

2 Title 49, Code of Federal Regulations, Parts 100 - 199, United States of America.

THIS DOCUMENT HAS BEEN PURCHASED BY THE GOVERNMENT AND MAY BE REPRODUCED AND USED IN CONNECTION WITH ANY GOVERNMENT PROCUREMENT OR MAINTENANCE OPERATION.

NOTE: DATA MARKED WITH AN ASTERISK (*) IS PECULIAR TO A PRIOR MANUFACTURER. IT DOES NOT TAKE PRECEDENCE OVER ANY OTHER DATA ON THIS DRAWING, AND IS NOT CONTRACTUALLY BINDING ON EITHER THE CONTRACTOR OR THE GOVERNMENT.

REVISIONS			
LTR	DESCRIPTION	DATE	APPROVED
C	REDRAWN WITH ECP W/BFO22010, NOR 020	13 AUG 81	ES-HJW

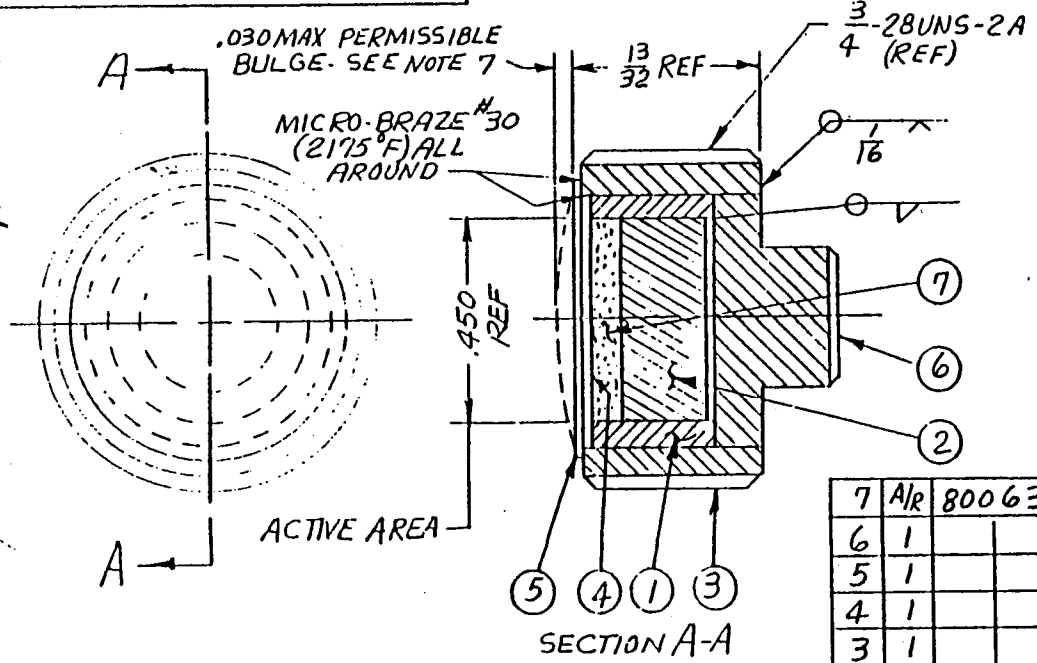

SOURCE CONTROL DRAWING

FIND NO.	QTY REQD	CODE IDENT.	PART NO. OR IDENTIFYING NO.	NOMENCLATURE OR DESCRIPTION	SPECIFICATION	NOTE
7	A/R	80063	SM-B-509057-1	MATERIAL, RADIOACTIVE		8E9
6	1		SM-B-509054	PLUG		
5	1		SM-B-509053	WINDOW, OUTER		
4	1		SM-B-509052	WINDOW, INNER		
3	1		SM-B-509051	CAPSULE, OUTER		
2	1		SM-B-509050	PLUG		
1	1		SM-B-509049	CAPSULE, INNER		

PARTS LIST

APPROVED SOURCE

MFG PART NO	SOURCE
3 FIG	3M CO ST PAUL MINN. 55105

NEXT ASSY	USED ON
SM-D-508994	
SM-D-508981	DL-508965

APPLICATION

UNLESS OTHERWISE SPECIFIED
DIMENSIONS ARE IN INCHES
TOLERANCES ON:
FRACTIONS ____ DECIMALS ____ ANGLES ____

MATERIAL: ____

DA-28-043-AMC-02402E

ELECTRONICS COMMAND
REVIEWED ER-1 SM'F
APPROVED ER-1 SM'F
DATE 24 FEB 69

DEPARTMENT OF DEFENSE
U. S. ARMY ELECTRONICS COMMAND
FORT MONMOUTH NEW JERSEY 07703

SOURCE ASSEMBLY

SIZE	CODE IDENT NO.	
B	80063	SM-B-509057

SCALE | SHEET 1 OF 3

AMSEL FORM 10438 1 APR 73 HISA-FM 550-73

WHEN REFERRING TO THIS DRAWING STATE DRAWING NO., APPLICABLE ISSUE LETTER IF ANY, AND DATE

THIS DOCUMENT HAS BEEN PURCHASED BY THE GOVERNMENT AND MAY BE REPRODUCED AND USED IN CONNECTION WITH ANY GOVERNMENT PROCUREMENT OR MAINTENANCE OPERATION.

NOTE: DATA MARKED WITH AN ASTERISK (*) IS PECULIAR TO A PRIOR MANUFACTURER. IT DOES NOT TAKE PRECEDENCE OVER ANY OTHER DATA ON THIS DRAWING, AND IS NOT CONTRACTUALLY BINDING ON EITHER THE CONTRACTOR OR THE GOVERNMENT.

REVISIONS			
LTR	DESCRIPTION	DATE	APPROVED
C	SEE SHEET 1	13 AUG 81	ES-HJW

NOTES

1. THIS ASSEMBLY SHALL MEET SPECIAL FORM MATERIAL TEST REQUIREMENTS OF TITLE 49, CODE OF FEDERAL REGULATIONS.
2. THE STRONTIUM -90 (SR90) SOURCES MUST MEET THE ANSI CLASSIFICATION OF 43343 (REFERENCE ANSI N542-1977).
3. THE RADIOACTIVE SOURCE ASSEMBLY MUST BE EVALUATED AND APPROVED FOR USE BY THE NUCLEAR REGULATORY COMMISSION OR AGREEMENT STATE. CONTRACTOR TO SUBMIT DOCUMENTATION OF THE ABOVE TO HEADQUARTERS, CECOM, DRSEL-SF-H, FORT MONMOUTH, NJ 07703.
4. WHEN THE SOURCE ASSEMBLIES ARE INSTALLED IN THE AN/UDM-2 ( ) RADIAC CALIBRATOR, EACH ASSEMBLY SHALL MEET THE FOLLOWING REQUIREMENT AND TEST PARAGRAPHS OF SPEC MIL-R-55350:

REQT PARA	TEST PARA
3.4.1.1	4.6.1.1
3.4.1.3	4.6.1.3

5. IN ADDITION, EACH SOURCE ASSEMBLY SHALL MEET THE FOLLOWING REQUIREMENT AND TEST PARAGRAPHS OF SPEC MIL-R-55350:

REQT PARA	TEST PARA
3.11	4.10
3.11.1	4.10.1.1
3.11.1.1	4.10.1.3
3.11.1.2	4.10.1.2 & 4.10.1.4
3.11.1.3	4.10.1.5

6. BACK SURFACE TO BE PAINTED RED (COMMERCIAL) FOR IDENTIFICATION AND EACH SOURCE ASSEMBLY SHALL CONTIAN A SERIAL NUMBER IN ACCORDANCE WITH PARAGRAPH 3.9.2 OF MIL-R-55350.
7. AIR PRESSURE BUILD UP DURING ASSEMBLY PROCEDURES MAY PRODUCE BULGING OF EITHER OR BOTH ITEMS 4 OR 5. ACCEPTABLE BULGING IS AS NOTED.
8. THE SR-90 RADIOISOTOPE SHALL BE CONTAINED IN A CERAMIC CARRIER MATERIAL. THIS CARRIER SHALL BE SPHERICAL, DRY, FREE FLOWING MATERIAL WITH AT LEAST 95% HAVING A DIAMETER IN THE RANGE OF 35 MICRONS MINIMUM AND 65 MICRONS MAXIMUM.
9. THE SR-90 RADIOISOTOPE WHEN CONTAINED IN THE CARRIER SHALL BE IDENTIFIED AS THE ACTIVATOR.
9.1. THE ACTIVATOR SHALL HAVE A MINIMUM SPECIFIC ACTIVITY OF 100 MILLCURIES PER GRAM OF ACTIVATOR.
9.2. THE ACTIVATOR SHALL EXHIBIT A SOLUBILITY NOT IN EXCESS OF 0.1 PERCENT WHEN A SAMPLE IS SOAKED AT 25°C FOR 24 HOURS IN 100 MILLILITERS OF 0.1 NORMAL HYDROCHLORIC ACID.
10. THE VENDOR OF THE SOURCE ASSEMBLY SHALL UTILIZE A QUALITY ASSURANCE SYSTEM THAT MEETS THE REQUIREMENTS OF MIL-Q-9858.
11. PRIOR TO THE AWARD OF A CONTRACT FOR SOURCE ASSEMBLIES, THE VENDOR SHALL SUBMIT FOR APPROVAL, WRITTEN PROCEDURE FOR:
A. MEASURING THE RADIATION OUTPUT OF THE SR-90 SOURCES.

FIND NO.	QTY REQD	CODE IDENT.	PART NO. OR IDENTIFYING NO.	NOMENCLATURE OR DESCRIPTION	SPECIFICATION	NOTE

PARTS LIST

NEXT ASSY	USED ON
SM-D-508994	
SM-D-508981	DL-508965

APPLICATION

UNLESS OTHERWISE SPECIFIED
DIMENSIONS ARE IN INCHES
TOLERANCES ON:
FRACTIONS DECIMALS ANGLES

MATERIAL:

ELECTRONICS COMMAND
REVIEWED
APPROVED
DATE

DEPARTMENT OF DEFENSE
U. S. ARMY ELECTRONICS COMMAND
FORT MONMOUTH NEW JERSEY 07703

SOURCE ASSEMBLY

SIZE B | CODE IDENT NO. 80063 | SM-B-509057

SCALE | SHEET 2 OF 3

EL FORM 10458 HISA-FM 358-73
1 APR 73

WHEN REFERRING TO THIS DRAWING STATE DRAWING NO., APPLICABLE ISSUE LETTER IF ANY, AND DATE

THIS DOCUMENT HAS BEEN PURCHASED BY THE GOVERNMENT AND MAY BE REPRODUCED AND USED IN CONNECTION WITH ANY GOVERNMENT PROCUREMENT OR MAINTENANCE OPERATION.

NOTE: DATA MARKED WITH AN ASTERISK (*) IS PECULIAR TO A PRIOR MANUFACTURER. IT DOES NOT TAKE PRECEDENCE OVER ANY OTHER DATA ON THIS DRAWING, AND IS NOT CONTRACTUALLY BINDING ON EITHER THE CONTRACTOR OR THE GOVERNMENT.

REVISIONS			
LTR	DESCRIPTION	DATE	APPROVED
C	SEE SHEET 1	13 AUG 81	ES Nalin

B. DETERMINE THE QUANTITY OF SR-99 CONTAINED IN EACH SOURCE ASSEMBLIES.

12. ONLY THE ITEM DESCRIBED ON THIS DRAWING WHEN PROCURED FROM THE VENDORS LISTED HEREON IS APPROVED BY HDQTRS, CS&TA LABS (ERADCOM), FT. MONMOUTH, NJ 07703 FOR USE IN THE APPLICATION SPECIFIED HEREON. A SUBSTITUTE ITEM SHALL NOT BE USED WITHOUT PRIOR TESTING AND APPROVAL BY HDQTRS, CS&TA LABS. PRIOR TO SUBMISSION FOR HDQTRS, CS&TA LABS APPROVAL, THE SUBSTITUTE ITEM SHALL MEET NOTES 1-11 REQUIREMENTS.

FIND NO.	QTY REQD	CODE IDENT.	PART NO. OR IDENTIFYING NO.	NOMENCLATURE OR DESCRIPTION	SPECIFICATION	NOTE

PARTS LIST

APPLICATION	
SM-D-508994	
SM-D-508981	DL-508965
NEXT ASSY	USED ON

UNLESS OTHERWISE SPECIFIED
DIMENSIONS ARE IN INCHES
TOLERANCES ON:
FRACTIONS DECIMALS ANGLES

MATERIAL:

ELECTRONICS COMMAND
REVIEWED
APPROVED
DATE

DEPARTMENT OF DEFENSE
U. S. ARMY ELECTRONICS COMMAND
FORT MONMOUTH NEW JERSEY 07703

SOURCE ASSEMBLY

SIZE	CODE IDENT NO.	
B	80063	SM-B-509057

SCALE | SHEET 3 OF 3

AMSEL FORM 1049B HISA-FM 550-73
1 APR 73

WHEN REFERRING TO THIS DRAWING STATE DRAWING NO., APPLICABLE ISSUE LETTER IF ANY, AND DATE