U.S. Department of Transportation
Pipeline and Hazardous Materials Safety Administration

IAEA CERTIFICATE OF COMPETENT AUTHORITY
SPECIAL FORM RADIOACTIVE MATERIALS
CERTIFICATE NUMBER USA/0336/S-96, REVISION 9

400 Seventh Street, S.W.
Washington, D.C. 20590

This certifies that the sources described have been demonstrated to meet the regulatory requirements for special form radioactive material as prescribed in the regulations of the International Atomic Energy Agency[1] and United States of America[2] for the transport of radioactive materials.

1. Source Identification - Isotope Products Laboratories (IPL) Model Nos. XFB-3 and XFB-4.

2. Source Description - Both sources are a cylindrical disk single encapsulation constructed of Type 304 or 304L stainless steel with fusion welds and a brazed-in-place beryllium window at one end. Approximate outer dimensions of the Model No. XFB-3 are 7.9 mm (0.312 in.) in diameter and 5.1 mm (0.2 in.) thick. Approximate outer dimensions of the Model No. XFB-4 are 10.8 mm (0.425 in.) in diameter and 5.0 mm (0.197 in.) thick. Construction of the Model No. XFB-3 shall be in accordance with attached IPL Drawing Nos. 3204, Revision H, Sheet 2 of 9; or 3205, Revision K, Sheet 6 of 11. Construction of the Model No. XFB-4 shall be in accordance with attached IPL Drawing No. 3233, Revision -, Sheet 3 of 9.

3. Radioactive Contents - Each source described by this certificate is authorized to contain any one of the following radionuclides limited to the activity shown. The radionuclides are in the form of chlorides, nitrates, or oxides in ceramic; oxides in gold or aluminum; or metal plated onto substrate.

Radionuclide	Activity
Na-22	0.185 GBq (0.005 Ci)
Fe-55	11.1 GBq (0.30 Ci)
Co-57	11.1 GBq (0.30 Ci)
Co-58	3.7 GBq (0.10 Ci)
Co-60	0.37 GBq (0.01 Ci)
Ge-68	1.85 GBq (0.05 Ci)
Sr-90	4.63 GBq (0.125 Ci)
Ru-106	1.85 GBq (0.05 Ci)
Cd-109	11.1 GBq (0.30 Ci)
Ba-133	3.7 GBq (0.10 Ci)
Cs-137	11.1 Gbq (0.30 Ci)
Gd-153	55.5 GBq (1.50 Ci)
Ra-226	1.85 GBq (0.05 Ci)
Lanthanides*	18.5 GBq (0.50 Ci)
Actinides**	11.1 GBq (0.30 Ci)

*(Isotopes of Ce, Pr, Sm, Eu, Gd, Yb, and Tm only)
**(Isotopes of Ac, Th, Pa, Np, U, Pu, Am, and Cm only)

---

[1] "Regulations for the Safe Transport of Radioactive Materials, 1996 Edition (Revised), No. TS-R-1 (ST-1, Revised)," published by the International Atomic Energy Agency (IAEA), Vienna, Austria.

[2] Title 49, Code of Federal Regulations, Parts 100 - 199, United States of America.

4. Quality Assurance - Records of Quality Assurance activities required by Paragraph 310 of the IAEA regulations[1] shall be maintained and made available to the authorized officials for at least three years after the last shipment authorized by this certificate. Consignors and consignees in the United States exporting or importing shipments under this certificate shall satisfy the requirements of Subpart H of 10 CFR 71.

5. Expiration Date - This certificate expires June 30, 2011.

This certificate is issued in accordance with paragraph 804 of the IAEA Regulations and Section 173.476 of Title 49 of the Code of Federal Regulations, in response to the petition and information dated May 23, 2006 submitted by Isotope Products Laboratories, Valencia, CA and in consideration of other information on file in this Office.

Certified by:

JUN 20 2006

for Robert A. McGuire
Associate Administrator
for Hazardous Materials Safety

(DATE)

Revision 8 - Issued to adjust activity levels and chemical forms, and renew the expiration date.

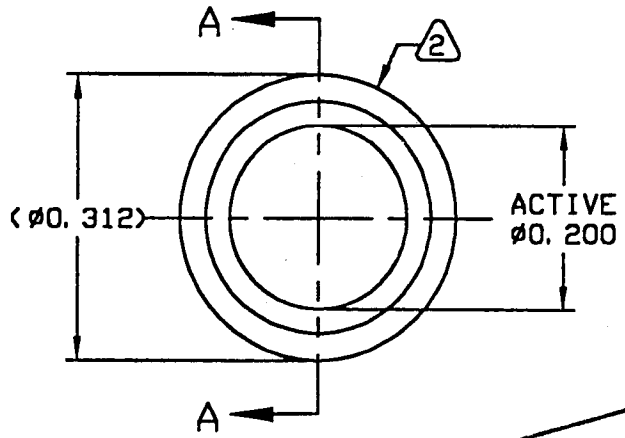

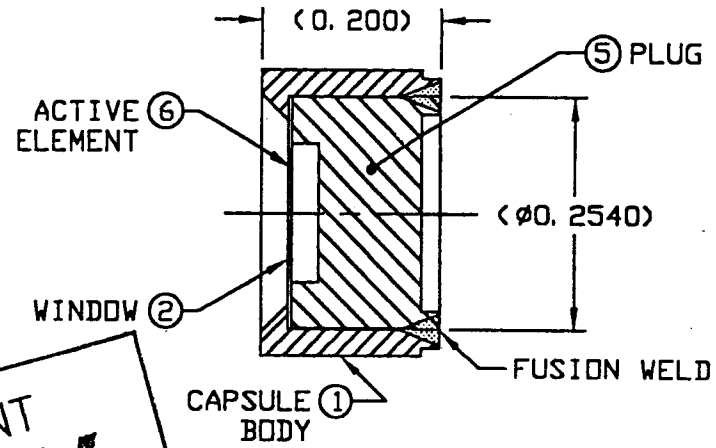

SECTION A-A

DOCUMENT
COPY
UNCONTROLLED
DATE ISSUED: 2 7 MAR 01

4. IDENTIFY PART NUMBER
3. LEAK TEST AFTER ENGRAVING.
2. ENGRAVE CHARACTERS 0.060 HIGH x 0.003 DEEP MAX ON CIRCUMFERENCE AND BLACK FILL:
   IPL NUCLIDE ACTIVITY SERIAL NUMBER DATE
1. ASSEMBLE COMPLETE PER ENGINEERING DRAWING AND PER PROCEDURE PM23-2.
   BRAZE OR FUSION WELD AS REQUIRED.

NOTES: UNLESS OTHERWISE SPECIFIED (CONTINUED ON SHEET 2B)

SEE NEXT SHEET FOR ASSEMBLY DASH NUMBER

A3204-X ASSEMBLY

ISOTOPE PRODUCTS LABORATORIES BURBANK, CALIFORNIA 91504	UNLESS OTHERWISE SPECIFIED DIMENSIONS ARE IN INCHES TOLERANCES ON FRACTION ±1/64; DECIMAL X ±.1, XX .01, XXX .002; ANGLE ±.5°	DESIGN JMD/RLT	DRAWING TITLE MODEL 3204 XFB-3 SOURCE		
		SCALE NONE	SERIES TITLE GFS & XFB SOURCES (PHI & BFI)		
THIS DRAWING IS THE PROPERTY OF ISOTOPE PRODUCTS LABORATORIES AND MAY NOT BE USED, REPRODUCED, PUBLISHED OR DISCLOSED TO OTHERS WITHOUT EXPRESS AUTHORIZATION BY ISOTOPE PRODUCTS LABORATORIES.	THIRD ANGLE PROJECTION	SIZE A	CAGE CODE 32993	REVISION H	DRAWING NUMBER 3204 / SHEET 2 OF 9

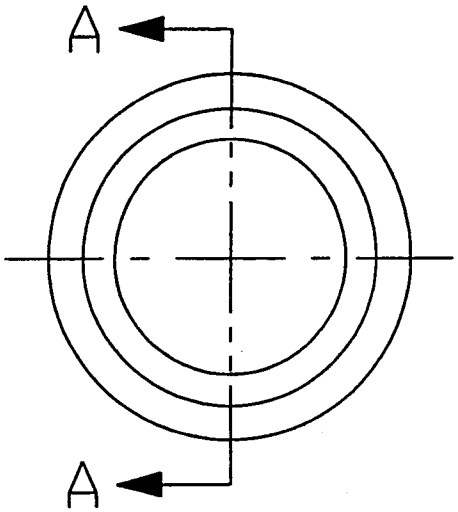

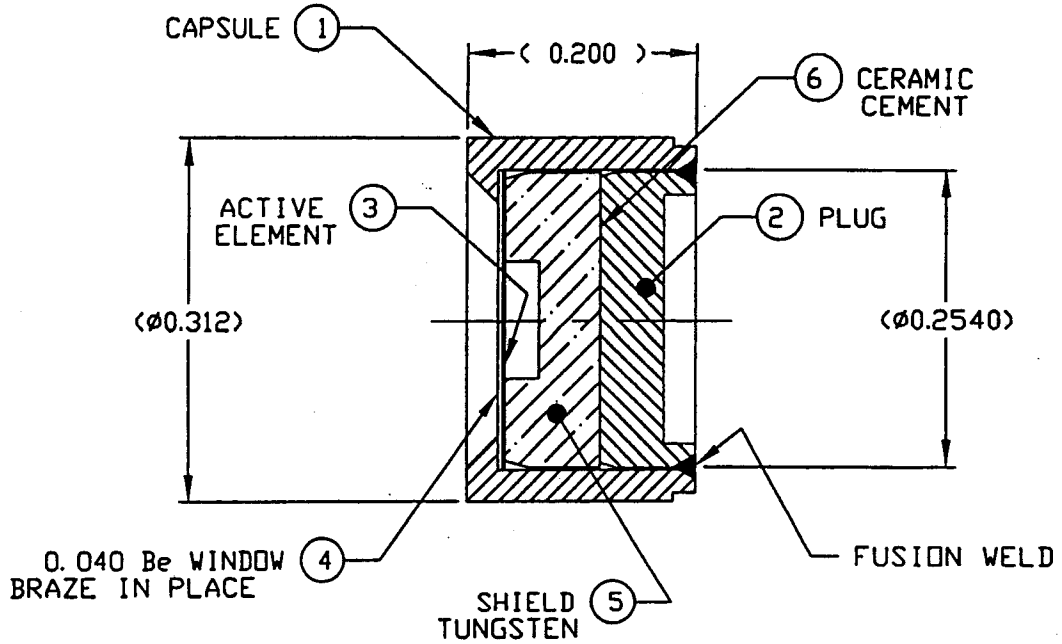

SECTION A-A

TABLE X	
X	MATERIAL
0	304 or 304L STAINLESS STEEL
1	MONEL

DOCUMENT COPY UNCONTROLLED
DATE ISSUED: 27 Aug

TABLE Y	
Y	ACTIVE ELEMENT AND DIMENSIONS
0	FOIL, 0.250 DIA x 0.005 THICK
1	CANE, 0.125 DIA x 0.030 THICK
2	CANE, 0.187 DIA x 0.020 THICK
3	CANE, 0.210 DIA x 0.040 THICK
4	CANE, 0.250 DIA x 0.040 THICK
5	CANE, 0.187 DIA x 0.040 THICK

2. INDIVIDUALLY PACKAGE AND IDENTIFY PART NUMBER THEREON
1. ASSEMBLE COMPLETE PER ENGINEERING DRAWING AND BRAZE OR FUSION WELD AS REQUIRED

NOTE: UNLESS OTHERWISE SPECIFIED

P/N: A3205-XY ASSEMBLY

ISOTOPE PRODUCTS LABORATORIES
BURBANK, CALIFORNIA 91504

THIS DRAWING IS THE PROPERTY OF ISOTOPE PRODUCTS LABORATORIES AND MAY NOT BE USED, REPRODUCED, PUBLISHED OR DISCLOSED TO OTHERS WITHOUT EXPRESS AUTHORIZATION BY ISOTOPE PRODUCTS LABORATORIES.

UNLESS OTHERWISE SPECIFIED DIMENSIONS ARE IN INCHES

TOLERANCES ON

FRACTION	DECIMAL X	DECIMAL XX	DECIMAL XXX	ANGLE
±1/64	±.1	.01	.002	±.5°

THIRD ANGLE PROJECTION

DESIGN	DRAWING TITLE
MG/DI	MODEL XFB-3 CAPSULE WITH TUNGSTEN SHIELD
SCALE NONE	SERIES TITLE INDUSTRIAL SOURCES, GFS AND XFB

SIZE	CAGE CODE	REVISION	DRAWING NUMBER	SHEET
A	32993	K	3205	6 OF 11

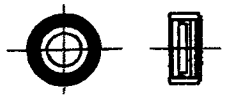

SEE "DETAIL"

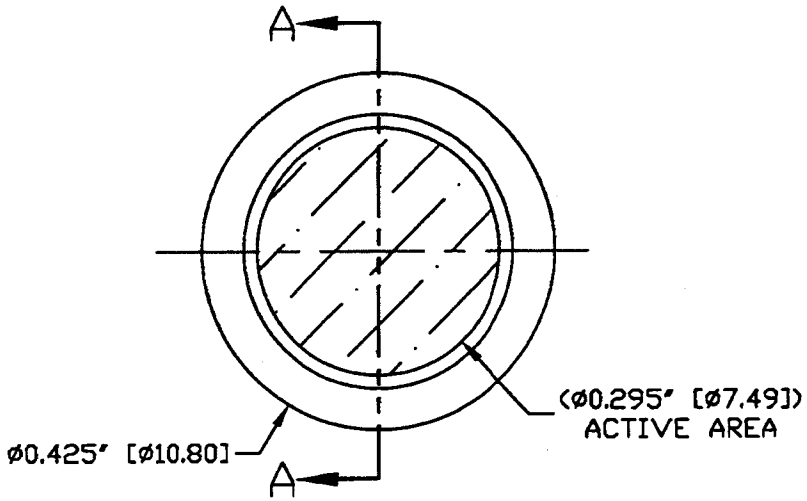

"DETAIL"

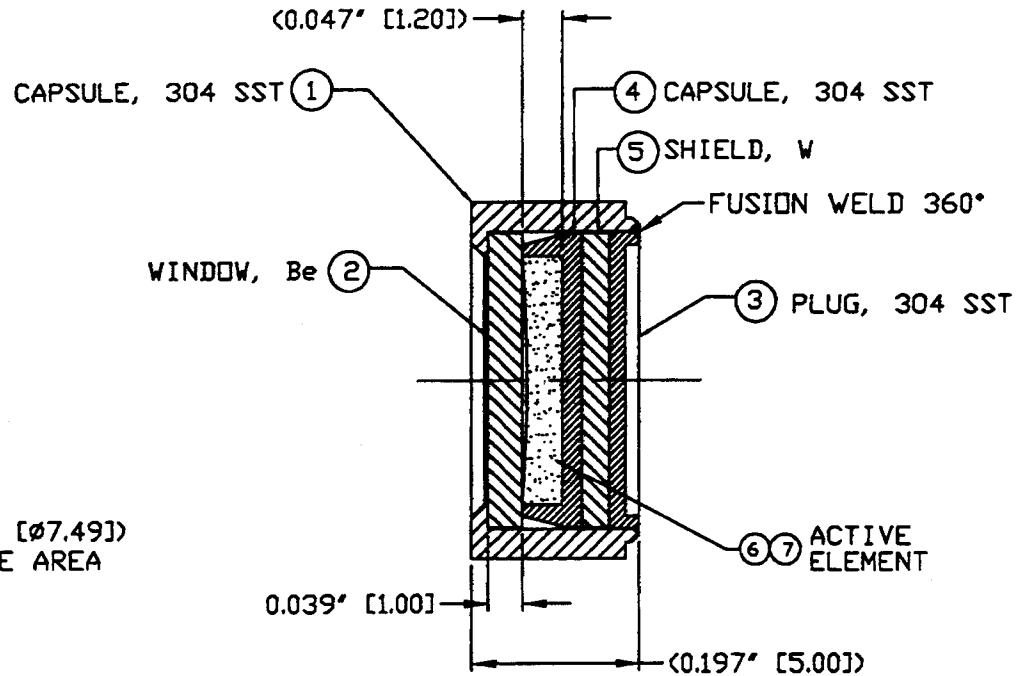

SECTION A–A

4. PACKAGE AND IDENTIFY PART NUMBER THEREON.
3. METRIC DIMENSIONS [mm] ARE IN MILLIMETERS
2. FUSION WELD AS REQUIRED.
1. ASSEMBLE COMPLETE PER ENGINEERING DRAWING

NOTES: UNLESS OTHERWISE SPECIFIED

P/N A3233 ASSEMBLY

Isotope Products Laboratories An Eckert & Ziegler Company VALENCIA, CALIFORNIA 91355	UNLESS OTHERWISE SPECIFIED DIMENSIONS ARE IN INCH-SIZES TOLERANCES (UNLESS OTHERWISE SPECIFIED) XXXX ± .002 INCH XXX ± .01 INCH XX ± .1 INCH ANGULAR TOLERANCE OF 0°±30' FRACTIONAL DIMENSIONS ± 1/16 ALL DIMENSIONS ARE FINISHED DIMENSIONS	DRAWN DI 24JUN02 ME/CHECKER KP 24JUN02 ENGR EZ 24JUN02	TITLE CESIO XFB SOURCE DRAWING NO. 3233	REV –
THIS DRAWING IS THE PROPERTY OF ISOTOPE PRODUCTS LABORATORIES AND MAY NOT BE USED, REPRODUCED, PUBLISHED OR DISCLOSED TO OTHERS WITHOUT EXPRESS AUTHORIZATION BY ISOTOPE PRODUCTS LABORATORIES.	THIRD ANGLE PROJECTION	SCALE NONE / SIZE A	SERIES TITLE INDUSTRIAL SOURCES, GFS AND XFB	SHEET 3 OF 9