U.S. Department of Transportation
Research and Special Programs Administration

400 Seventh St., S.W.
Washington, D.C. 20590

IAEA CERTIFICATE OF COMPETENT AUTHORITY
SPECIAL FORM RADIOACTIVE MATERIALS
CERTIFICATE NUMBER USA/0689/S, REVISION 0

This certifies that the source described has been demonstrated to meet the regulatory requirements for special form radioactive material as prescribed in the regulations of the International Atomic Energy Agency[1] and the United States of America[2] for the transport of radioactive materials.

1. Source Identification - AEA Technology QSA, Inc. Model X56 (Manufactured on or after February 25, 1981).

2. Source Description - Cylindrical single encapsulation made of stainless steel and tungsten inert gas or laser seal welded. Approximate exterior dimensions are 6.7 mm (0.26 in.) in diameter and 18.0 mm (0.7 in.) in length. Minimum wall thickness is 0.4 mm (0.02 in.). Construction shall be in accordance with attached AEA Technology QSA, Inc. Drawing No. RBA61063, Rev. A.

3. Radioactive Contents - No more than 11.0 TBq (297.3 Ci) of either Cobalt-60 or Iridium-192. The Co-60 and Ir-192 are in the form of a metal.

4. Quality Assurance - Records of Quality Assurance activities required by Paragraph 310 of the IAEA regulations[1] shall be maintained and made available to the authorized officials for at least three years after the last shipment authorized by this certificate. Consignors and consignees in the United States exporting or importing shipments under this certificate shall satisfy the requirements of Subpart H of 10 CFR 71.

5. Expiration Date - This certificate expires October 31, 2009.

This certificate is issued in accordance with paragraph 804 of the IAEA Regulations and Section 173.476 of Title 49 of the Code of Federal Regulations, in response to the petition and information dated September 7, 2004 submitted by AEA Technology QSA, Inc., Burlington, MA, and in consideration of other information on file in this Office.

Certified by:

Robert A. McGuire
Associate Administrator for
Hazardous Materials Safety

OCT - 8 2004
(DATE)

Revision 0 - Original issue.

---

1 "Regulations for the Safe Transport of Radioactive Material, 1996 Edition (Revised), No. TS-R-1 (ST-1, Revised)," published by the International Atomic Energy Agency (IAEA), Vienna, Austria.

2 Title 49, Code of Federal Regulations, Parts 100 - 199, United States of America.

Item No	Description		No off
1	BODY	STAIN.STL.	1
2	PLUG	STAIN.STL.	1
3	ACTIVE MATERIAL		A/R

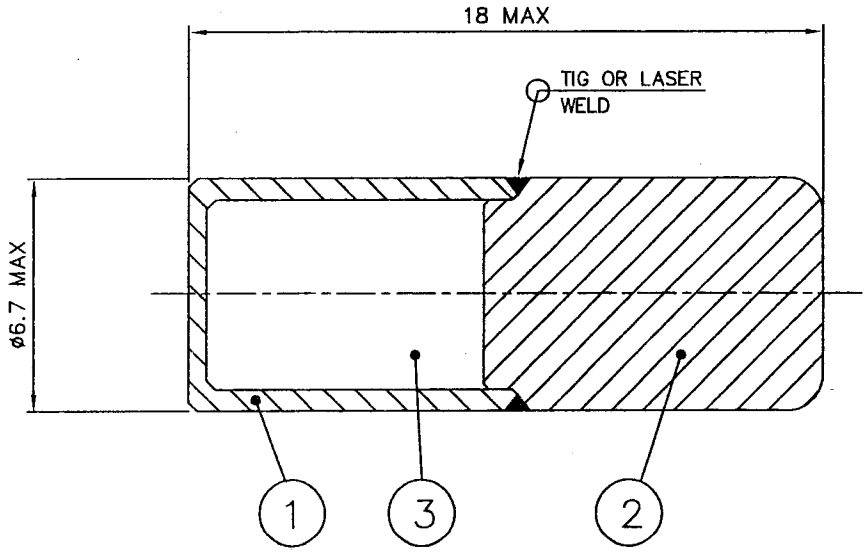

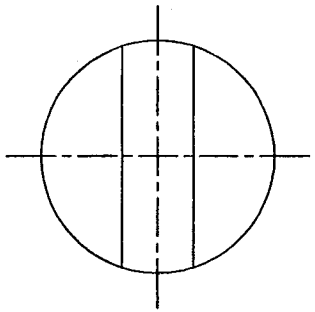

APPROVALS	
R. Mumma	7 Sep 04
[illegible]	7 Sep 04

DIMENSIONS IN MILLIMETERES
UNLESS OTHERWISE STATED TOLERANCES:

X ±0.5
X.X ±0.1
X.XX ±0.05
ANGULAR ±5°

INTERNAL N7
EXTERNAL N6

AEATECHNOLOGY QSA
40 NORTH AVE, BURLINGTON, MA 01803

DESCRIPTIVE DRAWING

TITLE X56 CAPSULE ASSEMBLY

SIZE A | DWG. NO. RBA61063 | REV A

SCALE: NONE | SHEET 1 OF 1

ERF # 891