U.S. Department
of Transportation

**Pipeline and
Hazardous Materials
Safety Administration**

**1200 New Jersey Avenue, S.E.
Washington, D.C. 20590**

**IAEA CERTIFICATE OF COMPETENT AUTHORITY
SPECIAL FORM RADIOACTIVE MATERIALS
CERTIFICATE USA/0804/S-96, REVISION 0**

This certifies that the sources described have been demonstrated to meet the regulatory requirements for special form radioactive material as prescribed in the regulations of the International Atomic Energy Agency[1] and United States of America[2] for the transport of radioactive material.

1. Source Identification - Eckert & Ziegler Isotope Products Model Nos. 30-16-1 and 30-16-2.

2. Source Description - Cylindrical double encapsulations made of Type 304 or Type 304L stainless steel and fusion welded. Approximate outer dimensions are 9.4 mm (0.37 in.) in diameter and 23.5 mm (0.93 in.) in length. Construction shall be in accordance with attached Eckert & Ziegler Isotope Products Drawing Nos. 30-16, Rev A, Sheet 3 of 6 (Model 30-16-1) or 30-16, Rev A, Sheet 4 of 6 (Model 30-16-2).

3. Radioactive Contents No more than 1.11 GBq (30 mCi) of Californium-252. The Cf-252 is in the form of Cf_2O_3 in aluminum, ceramic, or cermet wire.

4. Quality Assurance - Records of Quality Assurance activities required by Paragraph 310 of the IAEA regulations[1] shall be maintained and made available to the authorized officials for at least three years after the last shipment authorized by this certificate. Consignors in the United States exporting shipments under this certificate shall satisfy the requirements of Subpart H of 10 CFR 71.

5. Expiration Date - This certificate expires on March 31, 2020.

This certificate is issued in accordance with paragraph 804 of the IAEA Regulations and Section 173.476 of Title 49 of the Code of Federal Regulations, in response to the August 18, 2014 petition submitted by Eckert & Ziegler Isotope Products, Valencia, CA and in consideration of other information on file in this Office.

Certified by:

Dr. Magdy El-Sibaie
for Associate Administrator for
Hazardous Materials Safety

MAR 1 1 2015
(DATE)

Revision 0 - Original issue.

[1] "Regulations for the Safe Transport of Radioactive Material, 1996 Edition (Revised), No. TS-R-1 (ST-1, Revised)," published by the International Atomic Energy Agency (IAEA), Vienna, Austria.

[2] Title 49, Code of Federal Regulations, Parts 100 - 199, United States of America.

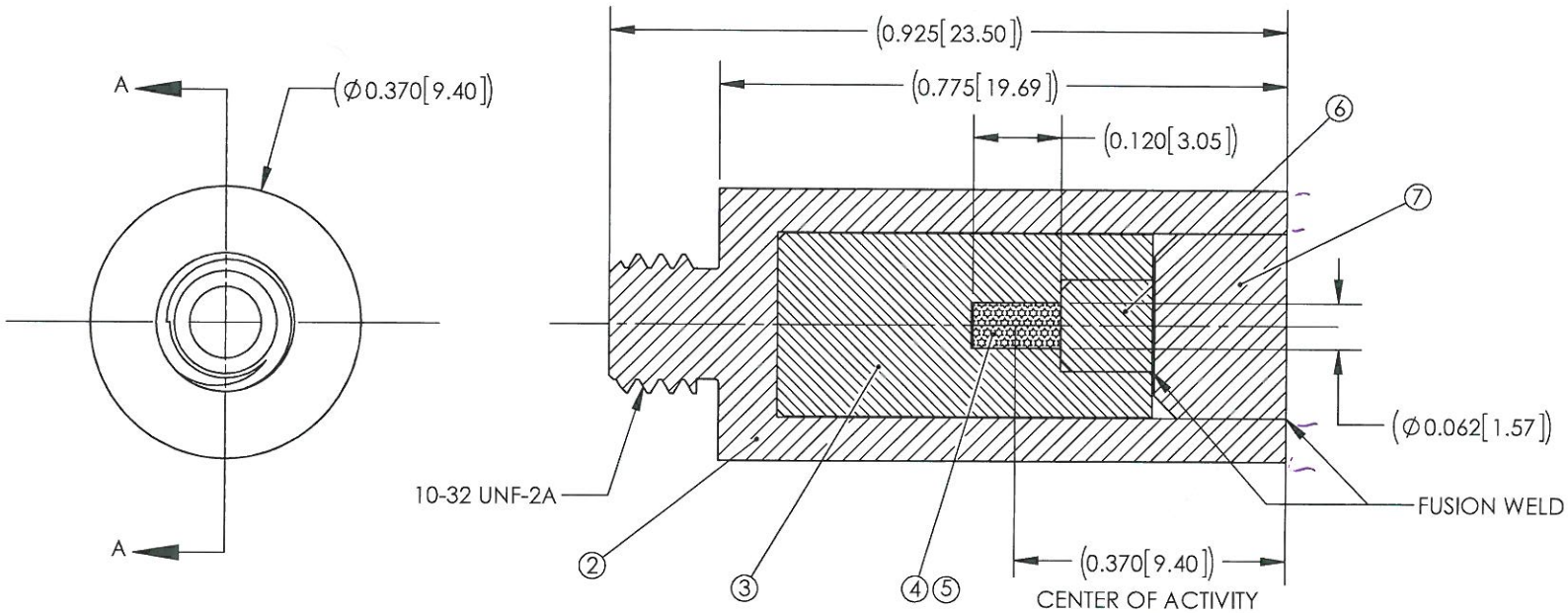

SECTION A-A

2. PACKAGE AND IDENTIFY PART NUMBER THEREON.
1. ASSEMBLE PER ENGINEERING DRAWING.
NOTES: UNLESS OTHERWISE SPECIFIED

P/N A30-16-1 Cf-252 SOURCE ASSEMBLY (CERAMIC ACTIVE ELEMENT)

Eckert & Ziegler
Isotope Products

VALENCIA, CALIFORNIA 91355

THIS DRAWING IS THE PROPERTY OF ECKERT&ZIEGLER ISOTOPE PRODUCTS AND MAY NOT BE USED, REPRODUCED, PUBLISHED OR DISCLOSED TO OTHERS WITHOUT EXPRESS AUTHORIZATION BY ECKERT&ZIEGLER ISOTOPE PRODUCTS.

CAGE CODE 32993
DRAWING SIZE LETTER

UNLESS OTHERWISE SPECIFIED DIMENSIONS ARE IN INCH SIZES.
METRIC UNITS [mm] ARE IN MILLIMETERS.

TOLERANCES (UNLESS OTHERWISE SPECIFIED)

X.XXX	± .002	INCH	ANGULAR TOLERANCE OF 0°±30'
X.XX	± .005	INCH	FRACTIONAL DIMENSIONS ± 1/32"
X.X	± .03	INCH	REFERENCE DIMENSIONS () N/A
X.	± .1	INCH	SURFACE ROUGHNESS µINCH MAX

DRAWN JJK
ME/CHECKER EZ
ENGINEER EZ/JJK
SCALE 4:1

TITLE
Cf-252 SOURCE

SERIES TITLE
INDUSTRIAL SOURCES, NEUTRON

DRAWING NO. 30-16
REV A
SHEET 3 OF 6

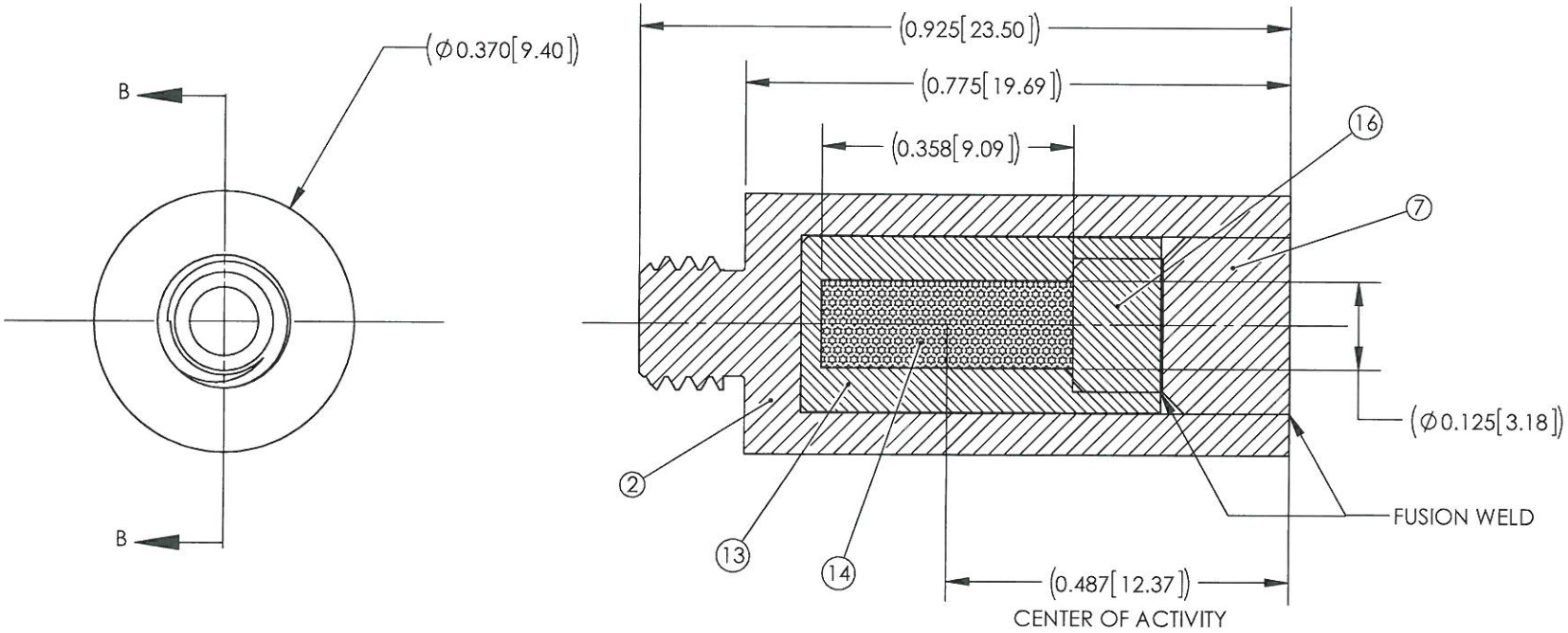

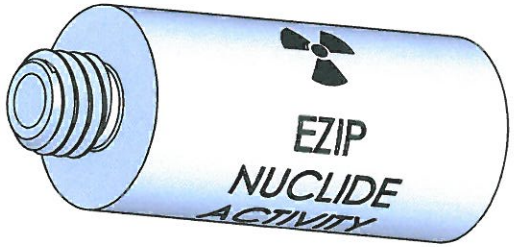

2. PACKAGE AND IDENTIFY PART NUMBER THEREON.
1. ASSEMBLE PER ENGINEERING DRAWING.
NOTES: UNLESS OTHERWISE SPECIFIED

P/N A30-16-2 Cf-252 SOURCE ASSEMBLY (WIRE ACTIVE ELEMENT)

Eckert & Ziegler
Isotope Products

VALENCIA, CALIFORNIA 91355

THIS DRAWING IS THE PROPERTY OF ECKERT&ZIEGLER ISOTOPE PRODUCTS AND MAY NOT BE USED, REPRODUCED, PUBLISHED OR DISCLOSED TO OTHERS WITHOUT EXPRESS AUTHORIZATION BY ECKERT&ZIEGLER ISOTOPE PRODUCTS.

CAGE CODE 32993	DRAWING SIZE LETTER	DRAWN JJK	TITLE Cf-252 SOURCE
UNLESS OTHERWISE SPECIFIED DIMENSIONS ARE IN INCH SIZES. METRIC UNITS [mm] ARE IN MILLIMETERS.		ME/CHECKER EZ	SERIES TITLE INDUSTRIAL SOURCES, NEUTRON
TOLERANCES (UNLESS OTHERWISE SPECIFIED) X.XXX ± .002 INCH ANGULAR TOLERANCE OF 0°±30' X.XX ± .005 INCH FRACTIONAL DIMENSIONS ± 1/32" X.X ± .03 INCH REFERENCE DIMENSIONS () N/A X. ± .1 INCH SURFACE ROUGHNESS µINCH MAX		ENGINEER EZ/JJK	
		SCALE 4:1	DRAWING NO. 30-16 / REV A / SHEET 4 OF 6

U.S. Department
of Transportation

**Pipeline and
Hazardous Materials
Safety Administration**

**East Building, PHH-23
1200 New Jersey Avenue SE
Washington, D.C. 20590**

CERTIFICATE NUMBER: USA/0804/S-96, Revision 0

ORIGINAL REGISTRANT(S):

Ms. Frida Tan
Regulatory Affairs Manager
Eckert & Ziegler Isotope Products
24937 Avenue Tibbitts
Valencia, 91355
USA