U.S. Department of Transportation
Research and Special Programs Administration

400 Seventh St., S.W.
Washington, D.C. 20590

IAEA CERTIFICATE OF COMPETENT AUTHORITY
SPECIAL FORM RADIOACTIVE MATERIALS
CERTIFICATE NUMBER USA/0043/S, REVISION 10

This certifies that the sources described below have been demonstrated to meet the regulatory requirements for special form radioactive material as prescribed in the regulations of the International Atomic Energy Agency[1] and the United States of America[2] for the transport of radioactive materials.

1. Source Identification - Monsanto Research Corporation Model 2720 Series.

2. Source Description - The sources described by this certificate are cylindrical double encapsulations constructed of stainless steel with welded closures and with the dimensions indicated in the following table:

Model Number	Outside Diameter mm (inch)	Length mm (inch)
2721 A, B, or C	12.7 (0.50)	12.7 (0.50)
2722 A, B, or C	12.7 (0.50)	17.8 (0.70)
2723 A, B, or C	19.1 (0.75)	22.1 (0.87)
2724 A, B, or C	25.4 (1.00)	28.4 (1.12)
2725 A, B, or C	25.4 (1.00)	38.1 (1.50)
2726 A, B, or C	25.4 (1.00)	50.8 (2.00)
2727 A, B, or C	38.1 (1.50)	63.5 (2.50)
2728 A, B, or C	38.1 (1.50)	88.9 (3.50)
2729 C	38.1 (1.50)	53.3 (2.10)

The sources authorized by this certificate are only those that have been manufactured prior to 1984 in accordance with Monsanto Research Corporation Drawing Numbers: B2721-AA00, B2722-AA00, B2723-AA00, B2724-AA00, B2725-AA00, B2726-A000, B2728-A000, A2721-BA00, A2722-BA00, A2723-BA00, A2724-BA00, A2725-BA00, A2726-BA00, A2727-BA00, A2728-BA00, C2721-CA00, C2722-CA00, C2723-CA00, C2724-CA00, C2725-CA00, C2726-CA00, C2727-CA00, C2728-CA00, C2729-CA00. Drawings Nos. C2729-CA00 and C2728-CA00 are attached as examples.

3. Radioactive Contents - These sources consist of Americium-241 or Plutonium-238 as oxide in powder form mixed with a neutron producing target material (Be, B, Li, F, or C) in powder form. The maximum activity of each is as indicated in the following table:

Model Number	Maximum TBq (Ci) Content	Model Number	Maximum TBq (Ci) Content	Model Number	Maximum TBq (Ci) Content
2721 A	0.01 (0.3)	2721 B	0.01 (0.4)	2721 C	0.01 (0.3)
2722 A	0.04 (1)	2722 B	0.05 (1.4)	2722 C	0.05 (1.3)
2723 A	0.11 (3)	2723 B	0.11 (2.9)	2723 C	0.09 (2.35)
2724 A	0.19 (5)	2724 B	0.22 (6)	2724 C	0.21 (5.6)

[1] "Regulations for the Safe Transport of Radioactive Material, 1996 Edition (Revised), No. TS-R-1 (ST-1, Revised)," published by the International Atomic Energy Agency (IAEA), Vienna, Austria.

[2] Title 49, Code of Federal Regulations, Parts 100 - 199, United States of America.

CERTIFICATE USA/0043/S, Revision 10

Model Number	Maximum TBq (Ci) Content	Model Number	Maximum TBq (Ci) Content	Model Number	Maximum TBq (Ci) Content
2725 A	0.31 (8.5)	2725 B	0.37 (10)	2725 C	0.42 (11.4)
2726 A	0.44 (12)	2726 B	0.59 (16)	2726 C	0.65 (17.7)
2727 A	0.22 (6)	2727 B	1.74 (47)	2727 C	1.78 (48)
2728 A	0.37 (10)	2728 B	2.78 (75)	2728 C	2.89 (78)
				2729 C	1.28 (34.7)

4. Quality Assurance - Records of Quality Assurance activities required by Paragraph 310 of the IAEA regulations[1] shall be maintained and made available to the authorized officials for at least three years after the last shipment authorized by this certificate. Consignors and consignees in the United States exporting or importing shipments under this certificate shall satisfy the requirements of Subpart H of 10 CFR 71.

5. Expiration Date - This certificate expires September 30, 2007.

This certificate is issued in accordance with paragraph 804 of the IAEA Regulations and Section 173.476 of Title 49 of the Code of Federal Regulations, in response to the petition and information dated June 28, 2002 submitted by The Dow Chemical Company, Midland, MI, and in consideration of other information on file in this Office.

Certified by:

Robert A. McGuire
Associate Administrator for
Hazardous Materials Safety

AUG - 6 2002
(DATE)

Revision 10 - Issued to reference the 1996 IAEA regulations, and to extend the expiration date.

REVISIONS					
ZONE	SYM	DESCRIPTION	DATE	APPROVAL	DE / MFG / QA / MS

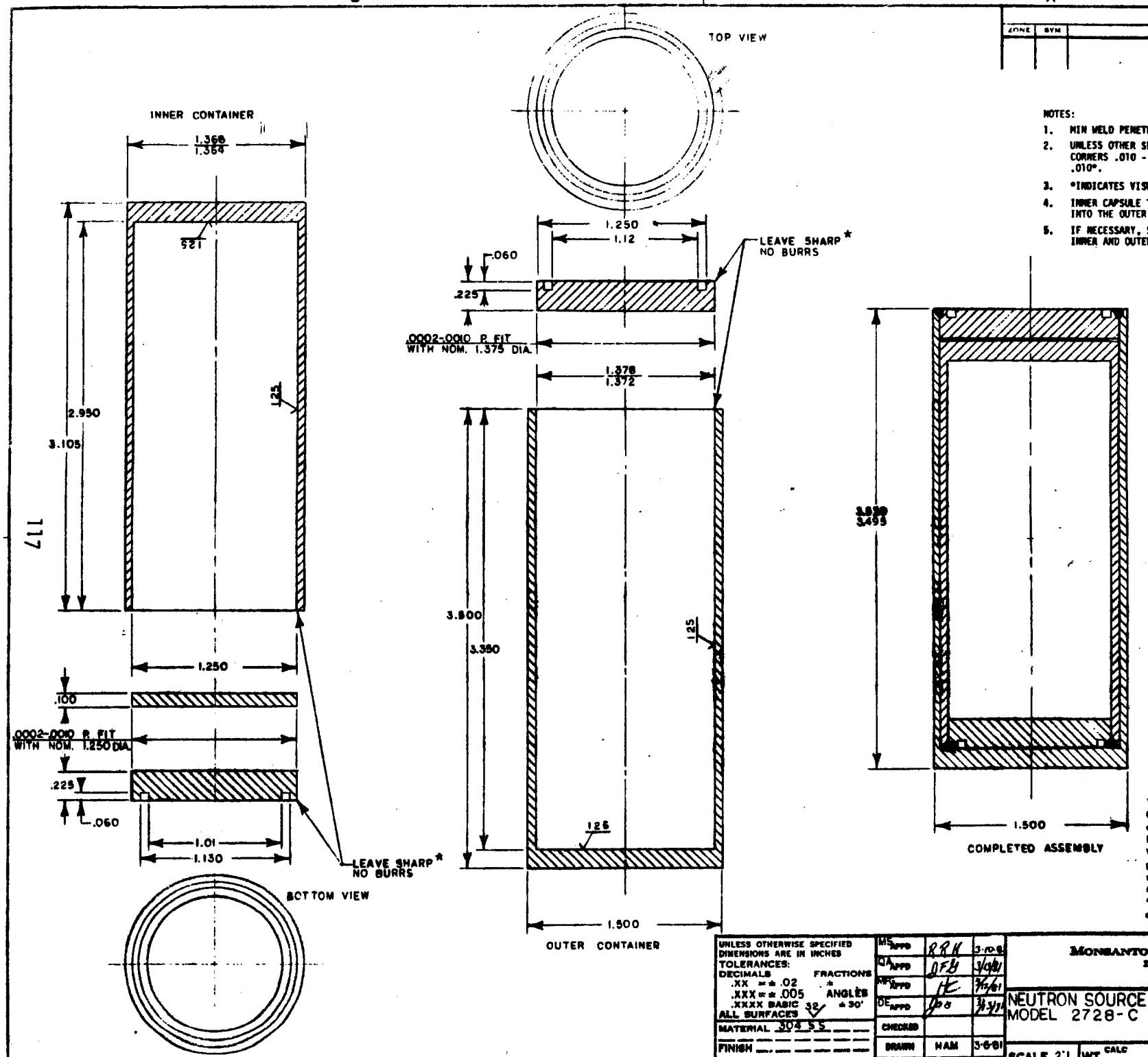

NOTES:

1. MIN WELD PENETRATION -.045 FOR EACH CONTAINER.
2. UNLESS OTHER SPECIFIED: BREAK OUTSIDE CORNERS .010 - .020", RADIUS INSIDE CORNERS .010".
3. *INDICATES VISUAL INSPECTION IS ACCEPTABLE.
4. INNER CAPSULE TO BE INSERTED WELDED END FIRST INTO THE OUTER CAPSULE.
5. IF NECESSARY, S.S. SHIMS MAY BE PLACED BETWEEN INNER AND OUTER CONTAINER TO LIMIT MOVEMENT.

DWG NO.	REV
SHEET OF	

NOTICE

This drawing is the property of Monsanto Research Corporation and must be returned, without reproduction or duplication, at any time upon request, but in any event at completion of the work or job. While in the possession of the recipient, it must be properly safeguarded against revelation or disclosure to anyone except those employees who require it for the work or job. The recipient must keep confidential, and require his (its) employees to keep confidential, the information contained hereon.

UNLESS OTHERWISE SPECIFIED DIMENSIONS ARE IN INCHES
TOLERANCES:
DECIMALS .XX = ± .02 .XXX = ± .005 .XXXX BASIC
FRACTIONS ±
ANGLES ± 30'
ALL SURFACES 32

MATERIAL 304 S.S.
FINISH

MS APPD	RRH	3-10-81
QA APPD	DFB	3/9/81
MFG APPD	HE	3/12/81
DE APPD	DB	3/13/81
CHECKED		
DRAWN	HAM	3-6-81
SIGNATURE		DATE

MONSANTO RESEARCH CORPORATION
DAYTON LABORATORY
DAYTON, OHIO

NEUTRON SOURCE CONTAINER
MODEL 2728-C

SCALE 2:1 | WT CALC ACT. | CODE IDENT NO.

DWG NO.	REV
C2728-CA00	0
SHEET OF	

117

REVISIONS			DE	MFG	QA	MS
SYM.	DESCRIPTION	DATE	APPROVAL			

NOTES:

1. UNLESS OTHERWISE SPECIFIED:
   BREAK OUTSIDE CORNERS .010 - .020*
   RADIUS INSIDE CORNERS .010
2. ALL CORNERS DESIGNATED WITH AN X SHALL BE LEFT SHARP*, NO BURRS.
3. *INDICATES VISUAL INSPECTION IS ACCEPTABLE.
4. INNER CAPSULE TO BE INSERTED WELDED END FIRST INTO THE OUTER CAPSULE.
5. IF NECESSARY, S.S. SHIMS MAY BE PLACED BETWEEN INNER AND OUTER CONTAINER TO LIMIT MOVEMENT.
6. MIN. WELD PENETRATION - .045" FOR EACH CONTAINER.

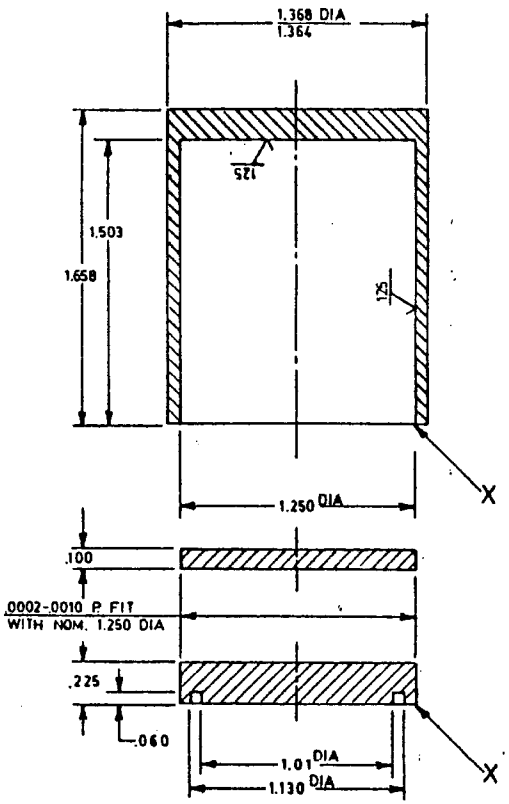

INNER CONTAINER

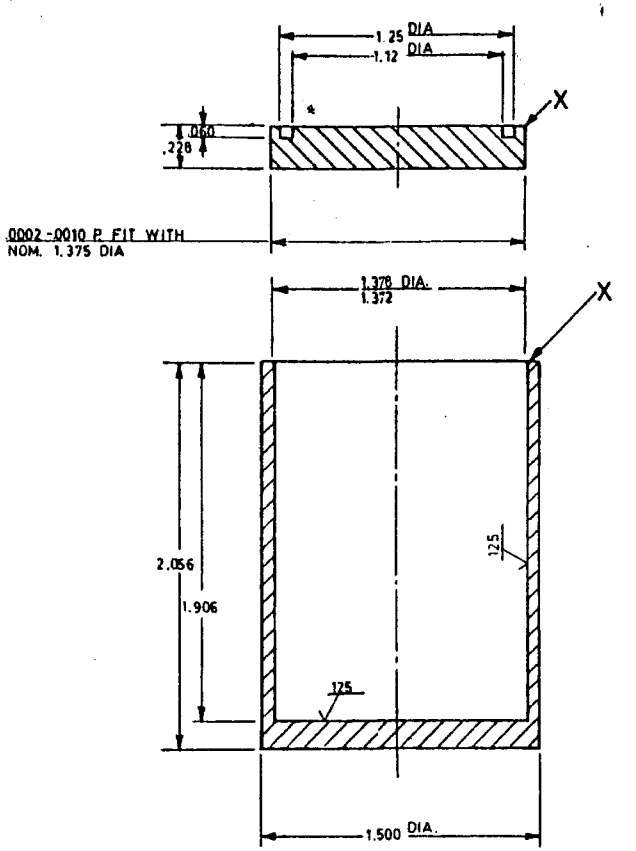

OUTER CONTAINER

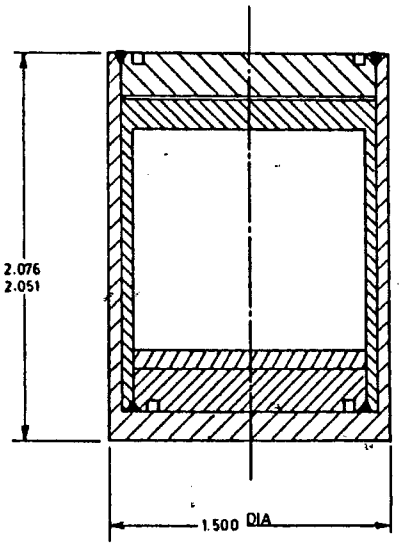

ASSEMBLY

DIMENSIONS ARE IN ☐ INCHES ☐ MILLIMETERS

UNLESS OTHERWISE SPECIFIED TOLERANCES:				
DECIMALS .XX ± .02, .XXX ± .005, .XXXX BASIC	FRACTIONS ±	ANGLES ±	MS	RRH 2-9-83
ALL SURFACES 32			QA	CEG 2-9-83
MATERIAL 304 STAINLESS STEEL			MFG	HC 2/9/83
			DE	JAB 2-9-83
			DRAWN	HAM 2-7-83
			SIGNATURE	DATE

MONSANTO RESEARCH CORPORATION
DAYTON LABORATORY
DAYTON, OHIO

NEUTRON SOURCE CAPSULE MODEL 2729-C

DWG. NO. C2729-CA00 REV 0

SCALE 2:1 WT. CALC ACT. CODE IDENT NO SHEET OF