U.S. Department of Transportation
Research and Special Programs Administration

400 Seventh Street S.W.
Washington D.C. 20590

IAEA CERTIFICATE OF COMPETENT AUTHORITY
SPECIAL FORM RADIOACTIVE MATERIALS
CERTIFICATE NUMBER USA/0066/S, REVISION 6

This certifies that the source described has been demonstrated to meet the regulatory requirements for special form radioactive material as prescribed in the regulations of the International Atomic Energy Agency[1] and the United States of America[2] for the transport of radioactive materials.

1. Source Identification - 3M Model 4F6H.

2. Source Description - Doubly encapsulated source of K Monel nickel alloy. Outer capsule is 30.1 mm (1.186 in) long, and 9.52 mm (0.375 in) in diameter. The active length may be either 3.81 mm (0.15 in) or 7.62 mm (0.30 in). Source information is engraved on the surface of the plug. Manufacture must be in accordance with 3M Drawing Nos. 12-1921-2591-7 or 12-1921-2592-5 (attached).

3. Radioactive Contents - Not more than 0.15 TBq (4 Ci) of cesium-137 in the form of 3M Brand ceramic microspheres.

4. Expiration Date - This certificate expires July 31, 2003.

This certificate is issued in accordance with paragraph 803 of the IAEA Regulations and Section 173.476 of Title 49 of the Code of Federal Regulations, in response to the petition and information dated January 10, 1997 and November 17, 1997 submitted by ICO, Houston, TX, and in consideration of other information on file in this Office.

Certified by:

Alan I. Roberts
Associate Administrator for Hazardous Materials Safety

JUL 22 1998
(DATE)

Revision 6 - Issued to extend the expiration date.

---

1 "Safety Series No. 6, Regulations for the Safe Transport of Radioactive Materials, 1973 Revised Edition, as amended," published by the International Atomic Energy Agency (IAEA), Vienna, Austria.

2 Title 49, Code of Federal Regulations, Parts 100 - 199, United States of America.

ITEM	PART NUMBER	QTY.	DESCRIPTION
1	B-12-1921-2593-3	1	CAPSULE, OUTT
2	B-12-1921-2597-4	1	ASS'Y, INNER C SULE, .30
3	B-12-1921-2595-8	1	PLUG, OUTER
4	B-12-1921-3071-9	1	ASS'Y, WELDED INNER CAPSULE

SEE NOTE

SEE NOTE

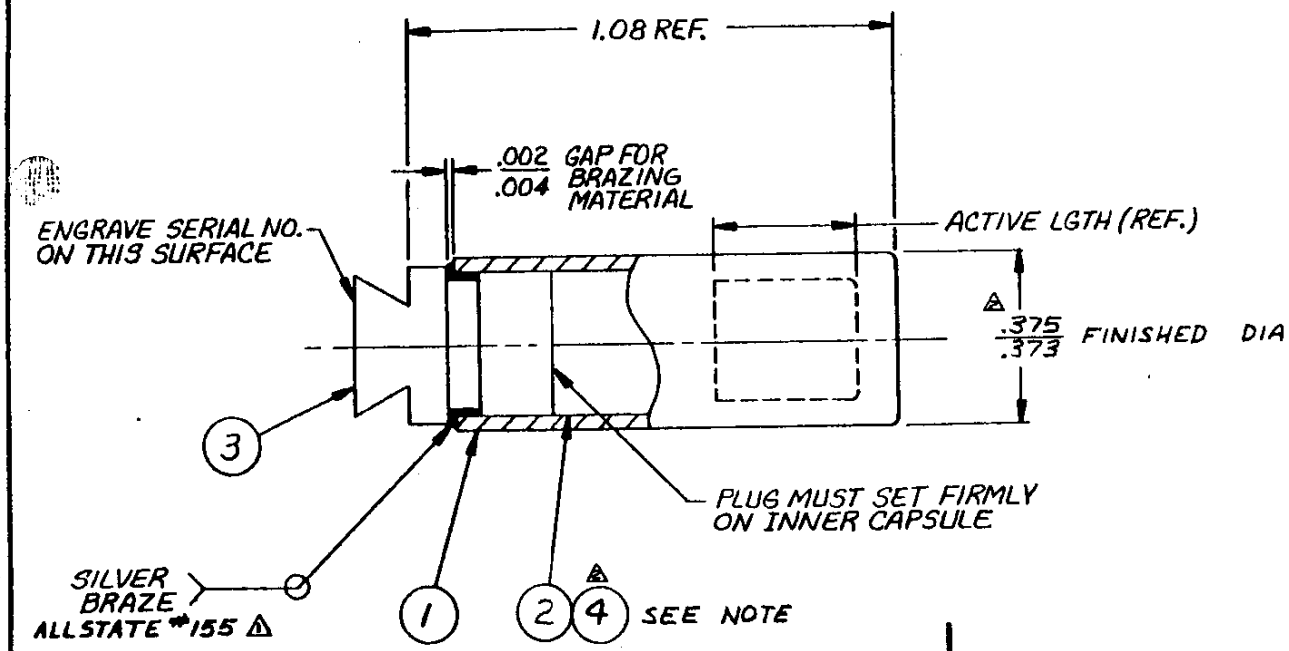

NOTE:
1. USE ITEM 2 IN PLACE OF ITEM 4 ONLY WHEN SPECIFIED.

USED ON

© 3M COPYRIGHT 19 79
This document is the copyrighted property of the 3M Company and may not be reproduced without 3M written permission or used for other than 3M authorized purposes.

TOLERANCE AND SURFACE ROUGHNESS UNLESS NOTED

OPERATION	PLACES IN DIMENSION .0	.00	.000	MAXIMUM SURFACE ROUGHNESS
MACHINING	±.1	±.02	±.005	✓
CUT-OFF (SAW, BURN, SHEAR)	±.1	±.04		
	±	±	±	
WELDING	±.1	±.06		
ANGULAR DIM.	±			
SCALE	4/1			

3M COMPANY
ENGINEERING DIVISION
St. Paul
Minnesota

DR. J.B. WYANDT
CH. [signature]
APP. [signature]

B

ISSUE	ISSUE DATE AND CHANGE RECORD	REV.	CH.
C	AUG 18, 81 ECO #81-0064 ADDED SEP 08 1981		
B	OCT. 13, 80 OCT 23 198 ECO #80-0180 ADDED		
A	JUNE 11, 79 JUL 25 1979 ECO #79-0047 REDRAWN FROM 1921-1300	JBW	

TITLE
ASS'Y, SOURCE, MODEL 4F6H, .30 ACT. LGTH

PART NO. 12-1921-2591-7

ITEM	PART NUMBER	QTY.	DESCRIPTION
1	B-12-1921-2593-3	1	CAPSULE, OUT
2	B-12-1921-2598-2	1	ASS'Y, INNER CAPSULE, .15
3	B-12-1921-2595-8	1	PLUG, OUTER
⚠ 4	B-12-1921-3069-3	1	ASS'Y WELDED INNER CAPSULE

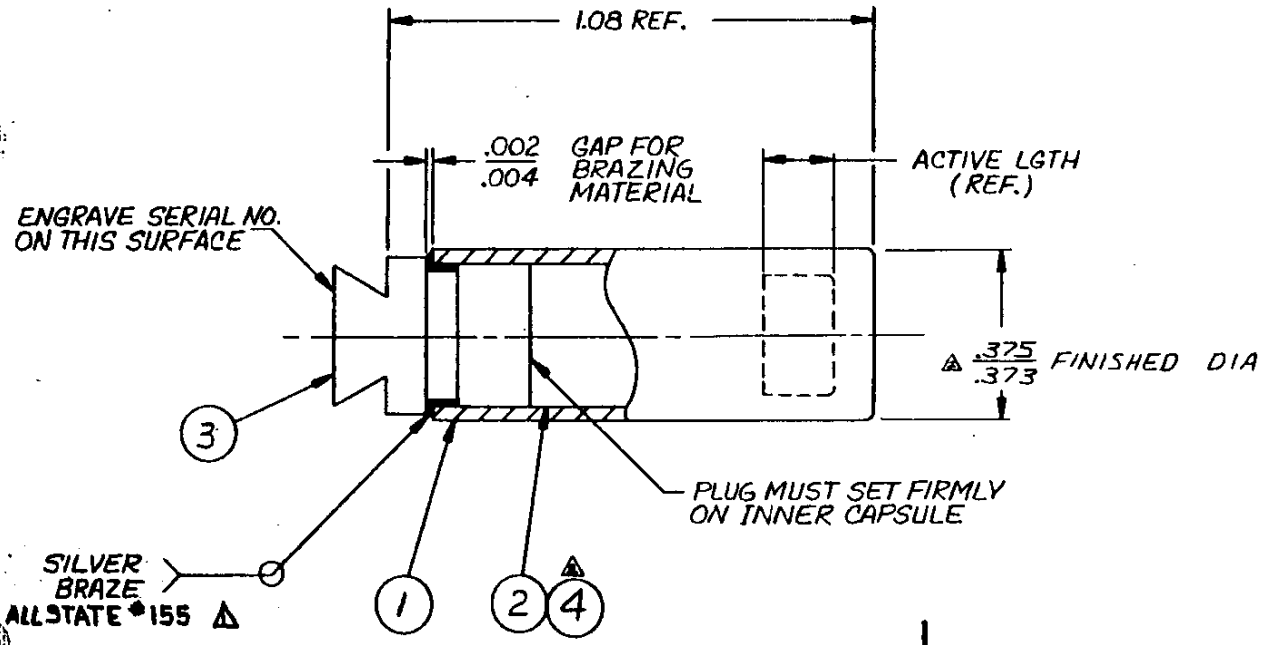

⚠ NOTE:
1. USE ITEM (2) IN PLACE OF ITEM (4) ONLY WHEN SPECIFIED.

USED ON

© 3M COPYRIGHT 1979
This document is the copyrighted property of the 3M Company and may not be reproduced without 3M written permission or used for other than 3M authorized purposes.

TOLERANCE AND SURFACE ROUGHNESS UNLESS NOTED

OPERATION	PLACES IN DIMENSION .0	.00	.000	MAXIMUM SURFACE ROUGHNESS
MACHINING	±.1	±.02	±.005	✓
CUT-OFF (SAW, BURN, SHEAR)	±.1	±.04		
	±	±	±	
WELDING	±.1	±.06		
ANGULAR DIM.	±			
SCALE	4/1			

3M COMPANY
ENGINEERING DIVISION
St. Paul Minnesota

DR. J.B. WYANDT
CH. [illegible]
APP. R.T. Schweiss

B

ISSUE	ISSUE DATE AND CHANGE RECORD	REV.	CH.
C	AUG 18, 81 ECO # 81-0064 ⚠ ADDED SEP 08 1981	[illegible]	[illegible]
B	OCT. 13, 80 ECO # 80-0180 ⚠ ADDED	[illegible]	[illegible]
A	JUNE 11, 79 JUL 25 1979 ECO # 79-0047 REDRAWN FROM 1921-1300	JBW	

TITLE
ASS'Y, SOURCE, MODEL 4F6H, .15 ACT. LGTH

PART NO. 12-1921-2592-5