U.S. Department of Transportation
Research and Special Programs Administration

400 Seventh Street, S.W.
Washington, D.C. 20590

IAEA CERTIFICATE OF COMPETENT AUTHORITY
SPECIAL FORM RADIOACTIVE MATERIALS
CERTIFICATE NUMBER USA/0113/S, REVISION 8

This certifies that the sources described have been demonstrated to meet the regulatory requirements for special form radioactive material as prescribed in the regulations of the International Atomic Energy Agency[1] and the United States of America[2] for the transport of radioactive materials.

1. Source Identification - Model Nos. NSR-F, NSR-D, and NSR-R.

2. Source Description - All inner capsules authorized by this certificate are of 304 stainless steel. All outer capsules have diameter 33.0 mm (1.3 in) and length 107 mm (4.2 in). The NSR-R has an outer capsule of multi-phase MP35N alloy; outer capsules of the NSR-F and NSR-D are constructed of 18% maraging steel (MS), or of MP35N alloy. Sources shall be manufactured in accordance with attached SWS drawings DH407655, Rev. B (NSR-R); H-142108 (NSR-F with MS); H-115686 (NSR-D with MS); H-357068 (NSR-F with MP35N); and H-357074 (NSR-D with MP35N). All NSR-F and NSR-D sources manufactured after Dec. 31, 1999 shall be manufactured in accordance with H-357068 or H-357074.

3. Radioactive Contents - All sources may contain a maximum of 1.0 GBq of Cf-252 in the form of metal wire or pellets. Alternatively, the NSR-F may contain a maximum of 0.74 TBq (20 Ci) and the NSR-D a maximum of 0.23 TBq (6.3 Ci) of Am-241 in oxide form combined with beryllium.

4. Quality Assurance - Records of Quality Assurance activities required by Paragraph 209 of the IAEA regulations[1] shall be maintained and made available to the authorized officials for at least three years after the last shipment authorized by this certificate. Consignors and consignees in the United States exporting or importing shipments under this certificate shall satisfy the requirements of Subpart H of 10 CFR 71.

5. Expiration Date - This certificate expires June 30, 2003. On December 31, 1999, this certificate supersedes, in its entirety, all previously issued revisions of USA/0113/S.

---

1 "Safety Series No. 6, Regulations for the Safe Transport of Radioactive Materials, 1985 Edition, as amended 1990" , published by the International Atomic Energy Agency (IAEA), Vienna, Austria.

2 Title 49, Code of Federal Regulations, Parts 100 - 199, United States of America.

CERTIFICATE USA/0113/S, REVISION 8

This certificate is issued in accordance with paragraph 703 of the IAEA Regulations and Section 173.476 of Title 49 of the Code of Federal Regulations, in response to the petition and information dated December 7, 1998 and March 5, 1999 submitted by Schlumberger Technology Corporation, Sugar Land, TX, and in consideration of other information on file in this Office.

Certified by:

AUG - 5 1999

(DATE)

Alan I. Roberts
Associate Administrator for Hazardous Materials Safety

Revision 8 - Issued to permit the use of MP35N alloy for the outer capsules of the NSR-F and NSR-D sources, and to prohibit the manufacture of those outer capsules with 18% maraging steel after Dec. 31, 1999.

NOTES-

1. SERIAL NUMBER AND IDENTIFICATION MARKING TO BE DONE BY SUPPLIER. SERIAL NUMBERING SYSTEM TO BE IN AGREEMENT WITH EH407691
2. SHIM OR FILL THIS SPACE IF NECESSARY TO PERMIT A MAXIMUM GAP OF .005.
3. PRESS CLOSURE TIGHT AGAINST CASE BEFORE WELDING.
4. MARK IDENTIFICATION "Cf252 1.15±.05 X 10^8 N/SEC" ON EACH END. OTHER MARKING TO BE PER SPECIFICATIONS LISTED ON BILL OF MATERIAL.
5. CONSTRUCTION AND INSPECTION PER EH407691

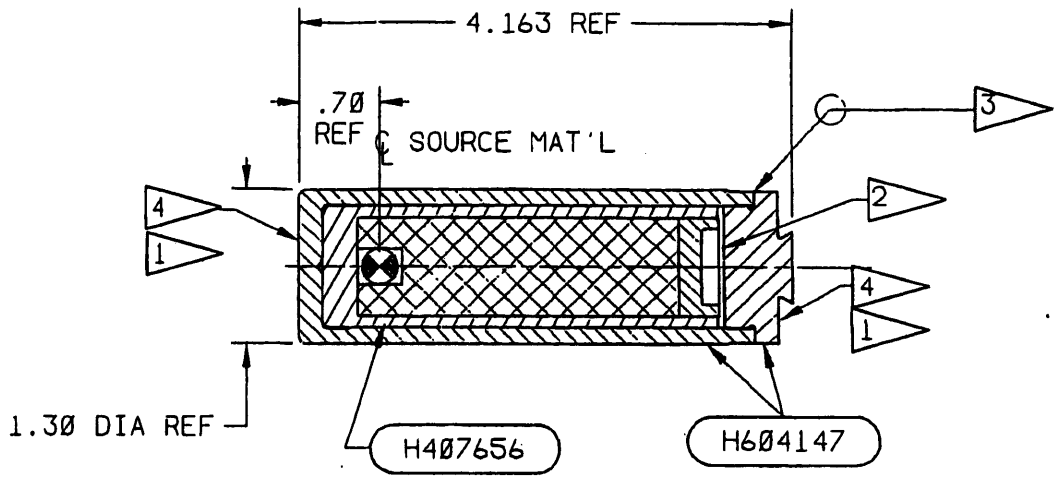

DH407655

FINISH OR TREATMENT		DET	QTY	MATERIAL
FILE CODE NSR-R	CONFIDENTIAL AND TRADE SECRET - DO NOT DISCLOSE, USE OR REPRODUCE WITHOUT PRIOR WRITTEN APPROVAL FROM SCHLUMBERGER			SCHLUMBERGER WELL SERVICES A DIVISION OF SCHLUMBERGER TECHNOLOGY CORPORATION
UNLESS OTHERWISE SPECIFIED TOLERANCE DECIMALS / SURFACE FINISH 125 ANGLES CONCENTRICITY TIR INSIDE CORNERS R MAX DIMENSIONS ARE IN INCHES REMOVE BURRS. BREAK EDGES .005 MIN - .020 MAX DIMENSIONS INCLUDE APPLIED FINISHES	DRN. R.E.HOOVER,JR. 20 AUG 85 DES. RIC HOOVER AUG 85 CKD. MIKE O-BRIEN 16 MAY 86 APP. J.S. HALL 16 MAY 86 P.E. MIKE O-BRIEN 16 MAY 86			NSR-R NEUTRON SOURCE, 27 MILLICURIE, CF-252 DH407655 REV. B SCALE 1/1 RELEASED JUL 15 1987 SHT. 1 OF 1

PLOT FILE : 06/04/87 OF DRAWING CELL 'DH407655' OF DATABASE 'USER28:[SAMERS.AACT]BH407655,3'

SHEET SIZE B

JUL 15 1987

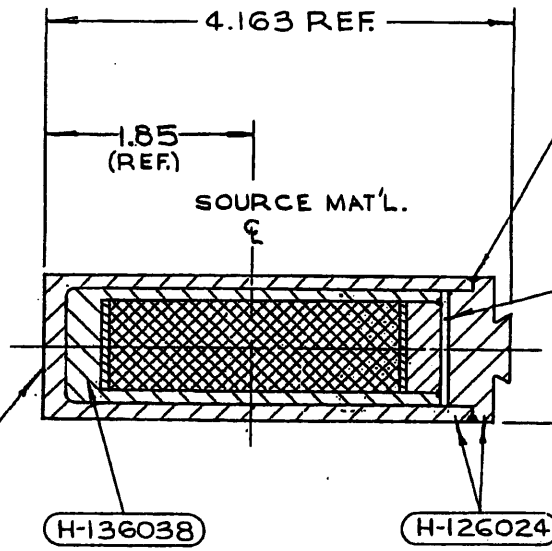

PRESS CLOSURE TIGHT AGAINST CASE BEFORE WELDING

SHIM OR FILL THIS SPACE, IF NECESSARY, TO PERMIT A MAX. GAP OF .005.

1.302 O.D. MAX. MACHINING AFTER WELDING PERMISSIBLE

PERMANENT IDENTIFYING MARKS ON EACH END. SEE NOTE #1

TREATED AFTER MACHINING

SEE ENG. SPECS. H-

DIMENSIONS AND TOLERANCES SHOWN APPLY TO FINISHED PART. ALLOWANCE FOR PLATING TO BE MADE BY MANUFACTURER.

NOTES:

1. SERIAL NUMBER & IDENTIFICATION MARKING TO BE DONE BY SUPPLIER. SERIAL NUMBERING SYSTEM TO BE APPROVED BY S.W.S.

H-208295 USED ON

DET	QTY	MATERIAL	APP	SPEC MAT. COMP. & PROCESSES

CONSTRUCTION & INSPECTION PER ENS H-209986 (A)

ENGINEERING APPROVED SUPPLIER: MONSANTO RESEARCH CO. DAYTON, OHIO OR NUMEC APOLLO, PA.

SOURCE ACTIVITY: 19.99 CURIE MAX. (A) (B)

SOURCE OUTPUT: $4.0^{+0.6}_{-0.0} \times 10^{7}$ N/SEC (C)

	DATE	BY	DESCRIPTION
C	9/19/75	LWS	ECN 52900
B	1-27-76	RLZ	ECN 42573 FEB 5 1976
A	8-12-75	RLH	ECN 39819 AUG 22 1975

REVISIONS

PROJECTS	NSR-F		

TOLERANCES UNLESS OTHERWISE SPECIFIED

0	±.030	CONCENTRICITY .010 T.I.R.
00	±.015	125 √ ON ALL MACHINED SURFACES
000	±.005	
ANG.	±½°	BREAK ALL CORNERS .015 MAX. .010 MIN. (R. OR 45°)

DO NOT COPY, DISPLAY, OR USE DRAWING WITHOUT AUTHORIZATION — DO NOT SCALE DRAWING

DATA McCOY	APPROVED FOR RELEASE	
CKD.	DES. ENGR.	PROD. ENGR.
DRN. RLS	DATE 1-26-68	SCALE FULL

SCHLUMBERGER WELL SERVICES
A Division of Schlumberger Technology Corporation
HOUSTON, TEXAS

NEUTRON SOURCE, RADIOACTIVE (C)
Am-Be 16 CURIE

ASSY DWG. H-142108

UNIT-ASSY DWG. H-142108

FEB 2 1971 ©

SHEET SIZE B

NOV 20 1979

REF H-48222

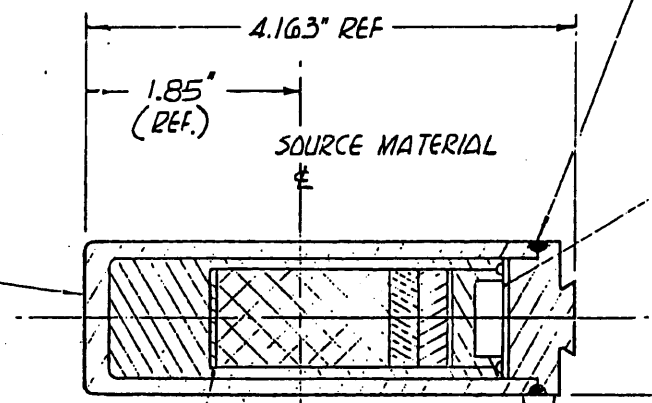

NOTES:

1. SERIAL NUMBER + IDENTIFICATION MARKING TO BE DONE BY SUPPLIER. SERIAL NUMBERING SYSTEM TO BE APPROVED BY S.W.S. MFGR'S IDENTIFICATION MARK PERMISSIBLE. (E)
2. SOURCE OUTPUT: $0.9^{+0.1}_{-0.0} \times 10^{7}$ N/SEC
   (F) MAX ACTIVITY: 7.99 CURIE

H-208286
WHERE USED

MATERIAL

(B) (F) CONSTRUCTION + INSPECTION PER ENS H-209986

ENGINEERING APPROVED SUPPLIERS:

(A) MONSANTO RESEARCH CO. DAYTON, OHIO

OR

NUMEC APOLLO, PA

No.	DATE	BY	DESCRIPTION
F	9-19-79	LVS	ECN 52900
E	1-18-72	MC	ECN 19892 FEB 1 1972
D	2-24-70	V.A.	ECN 15553
C	12-28-67	RSB	ADDED "MACHINING AFTER...." SHIM NOTE WAS "SHIM OR FILL THIS SPACE WITH SST. TO PREVENT..."
B	12-28-64	VI	H-126076 H-126024 WAS H-113369 H-45779
A	10-15-63	HK	ADD ALT. SUPPLIER

REVISIONS

PROJECTS			
NLS-C	NLS-D	NLS-L	
NLS-MD	NLS-ND	NSR-D	

(D)

TOLERANCES UNLESS OTHERWISE SPECIFIED

1.0	±.030	CONCENTRICITY .010 T.I.R.
1.00	±.015	125 V ON ALL MACHINED SURFACES
1.000	±.005	
ANG.	±½°	BREAK ALL CORNERS .015 MAX. .010 MIN. (R. OR 45°)

DO NOT COPY, DISPLAY, OR USE DRAWING WITHOUT AUTHORIZATION — DO NOT SCALE DRAWING

DATA MOSER	CKD. W	APP.
DWN. Adnot	DATE 5-7-68	SCALE Full

SCHLUMBERGER WELL SURVEYING CORP.
HOUSTON, TEXAS

(F) (D) NEUTRON SOURCE, RADIOACTIVE
Am-Be 5 CURIE

ASSEMBLY DWG. H-115686

(M)

NOV 20 1979

NOTES:

1. SERIAL NUMBER & IDENTIFICATION MARKING TO BE DONE BY SUPPLIER. SERIAL NUMBER TO BE SUPPLIED BY OFFICE OF CORPORATION RADIATION SAFTEY OFFICER.
2. SOURCE OF MATERIAL IS STORED NSR-F.
3. INSPECTION AS PER SH209986.

SOURCE ACTIVITY:

19.99 CURIE MAX.

SOURCE OUTPUT:

$4.0 \; {}^{+0.6}_{-0.0} \times 10^{7}$ N/SEC

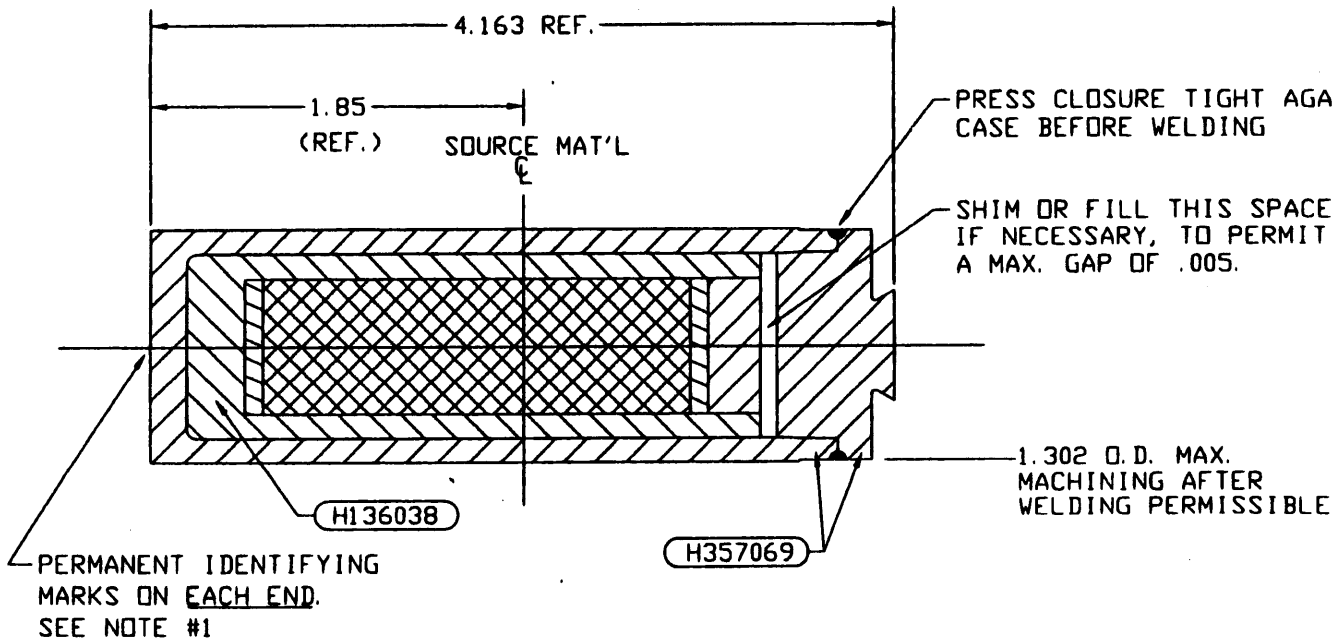

ENGINEERING APPROVED SUPPLIER:

GAMMATRON, INC.
5703 Etheridge
Houston, TX 77087
713-641-3640

FINISH OR TREATMENT		DET	QTY	MATERIAL
FILE CODE NSR-FC	CONFIDENTIAL AND TRADE SECRET - DO NOT DISCLOSE, USE OR REPRODUCE WITHOUT PRIOR WRITTEN APPROVAL FROM SCHLUMBERGER			SCHLUMBERGER WELL SERVICES
UNLESS OTHERWISE SPECIFIED: TOLERANCE DECIMALS .X = ±.030, .XX = ±.015, .XXX = ±.005; SURFACE FINISH 125√; ANGLES = ±.5°; CONCENTRICITY .010 TIR; INSIDE CORNERS R MAX; DIMENSIONS ARE IN INCHES; REMOVE BURRS; BREAK EDGES .005 MIN, .020 MAX; DIMENSIONS INCLUDE APPLIED FINISHES	DRN JT MORRISON 1-26-98; CHK; ENG J M BATES 1-26-98; APP J M BATES 1-26-98; P.C. J M BATES 1-26-98			NUETRON SOURCE, RADIOACTIVE, RECYCLED Am-Be 16 CURIE
				H357068 REV AA
				SCALE 2-1; WT LBS; SHT 1 OF

H357068

NOTES:

1. SERIAL NUMBER & IDENTIFICATION MARKING TO BE DONE BY SUPPLIER.
   SERIAL NUMBER TO BE SUPPLIED BY OFFICE OF CORPORATION RADIATION SAFETY OFFICER.
2. SOURCE OUTPUT: $0.9^{+0.1}_{-0.0} \times 10^{7}$ N/SEC
   MAX ACTIVITY: 7.99 CURIE
3. ALTERNATE PART IS H126024.
4. SOURCE MATERIAL IS STORED NSR-D.

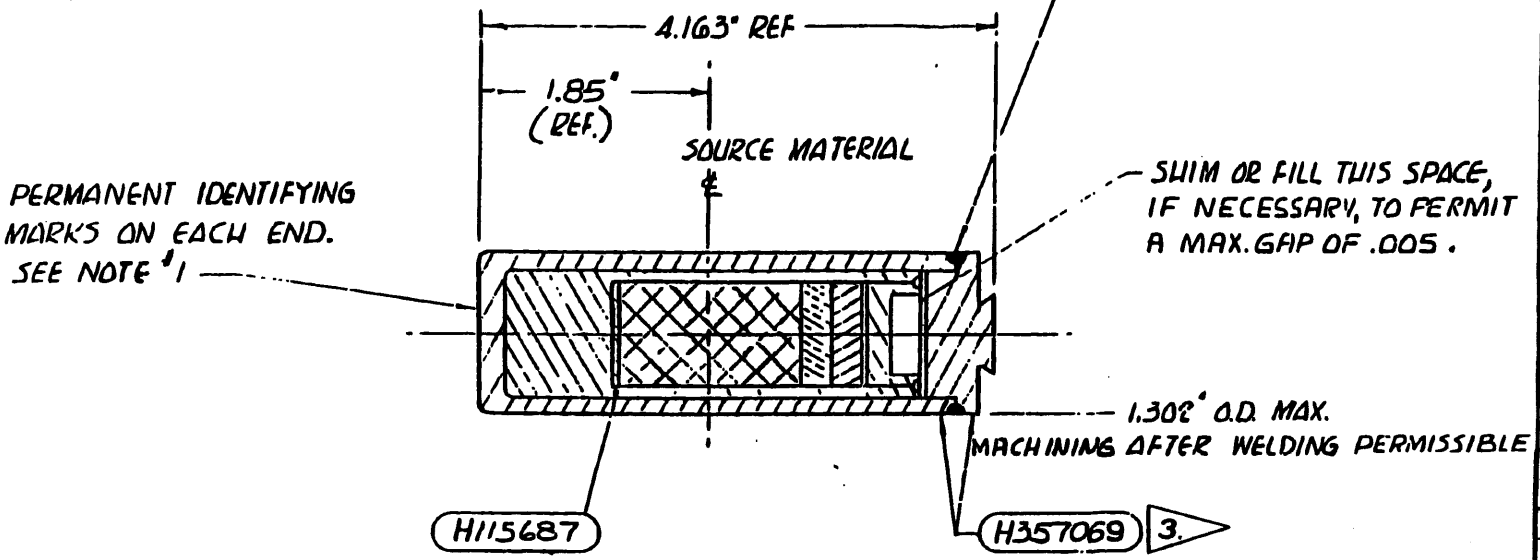

H-208286
WHERE USED

MATERIAL

CONSTRUCTION & INSPECTION PER ENS SH209986

ENGINEERING APPROVED SUPPLIERS:

GAMMATRON, INC.
5703 Etheridge
Houston, TX 77087
713-641-3640

No.	DATE	BY	DESCRIPTION
A	2-9-98	JTM	ECN# N18950

REVISIONS

PROJECTS	NSR-DB		

TOLERANCES UNLESS OTHERWISE SPECIFIED

1.6	±.030	CONCENTRICITY .010 T.I.R.
1.00	±.015	125 V ON ALL MACHINED SURFACES
1.000	±.005	
ANG.	±½°	BREAK ALL CORNERS .015 MAX. .010 MIN. (R. OR 45°)

DO NOT COPY, DISPLAY, OR USE DRAWING WITHOUT AUTHORIZATION — DO NOT SCALE DRAWING

DATA	CKD. BATES	APP. BATES
DWN. JTM	DATE 2-9-98	SCALE FULL

SCHLUMBERGER WELL SURVEYING CORP.
HOUSTON, TEXAS

NEUTRON SOURCE, RADIOACTIVE (RECYCLED) Am-Be 5 CURIE

ASSEMBLY DWG. H357074