U.S. Department
of Transportation
**Research and
Special Programs
Administration**

400 Seventh St., S.W.
Washington, D.C. 20590

**IAEA CERTIFICATE OF COMPETENT AUTHORITY**
**SPECIAL FORM RADIOACTIVE MATERIALS**
**CERTIFICATE NUMBER USA/0113/S, REVISION 9**

This certifies that the sources described have been demonstrated to meet the regulatory requirements for special form radioactive material as prescribed in the regulations of the International Atomic Energy Agency[1] and the United States of America[2] for the transport of radioactive materials.

1. Source Identification - Schlumberger Model Nos. NSR-F, NSR-D, NSR-R

2. Source Description - Cylindrical seal welded double encapsulation with inner capsule made of 304 stainless steel. Outer capsule exterior dimensions are 33.0 mm (1.3 in.) in diameter and 107 mm (4.2 in.) in length. Model No. NSR-R outer capsule is made of multi-phase MP35N alloy. Model Nos. NSR-F and NSR-D outer capsules are made of 18% maraging steel (MS) or MP35N alloy. Construction shall be in accordance with attached Drawing Nos. DH407655, Rev. B (NSR-R); H-142108 (NSR-F with MS); H-115686 (NSR-D with MS); H-357068 (NSR-F with MP35N); and H-357074 (NSR-D with MP35N). All Model NSR-F and NSR-D sources manufactured after December 31, 1999 shall be manufactured in accordance with H-357068 and H-357074.

3. Radioactive Contents - All models may contain no more than 1.0 GBq (27 mCi) of Californium-252 in the form of a metal wire or pellets. Alternatively, Model No. NSR-F may contain no more than 0.74 TBq (20 Ci) of Americium-241 in oxide form combined with Beryllium and Model No. NSR-D may contain no more than 0.23 TBq (6.3 Ci) of Americium-241 in oxide form combined with Beryllium.

4. Quality Assurance - Records of Quality Assurance activities required by Paragraph 310 of the IAEA regulations[1] shall be maintained and made available to the authorized officials for at least three years after the last shipment authorized by this certificate. Consignors and consignees in the United States exporting or importing shipments under this certificate shall satisfy the requirements of Subpart H of 10 CFR 71.

5. Expiration Date - This certificate expires June 1, 2008.

---

1 "Regulations for the Safe Transport of Radioactive Material, 1996 Edition (Revised), No. TS-R-1 (ST-1, Revised)," published by the International Atomic Energy Agency (IAEA), Vienna, Austria.

2 Title 49, Code of Federal Regulations, Parts 100 - 199, United States of America.

**CERTIFICATE USA/0113/S, REVISION 9**

This certificate is issued in accordance with paragraph 804 of the IAEA Regulations and Section 173.476 of Title 49 of the Code of Federal Regulations, in response to the petition and information dated February 3, 2003 and May 13, 2003 submitted by Schlumberger Technology Corporation, Sugar Land, TX, and in consideration of other information on file in this Office.

Certified by:

Robert A. McGuire
Associate Administrator for
Hazardous Materials Safety

MAY 15 2003
(DATE)

Revision 9 - Revised to extend the expiration date.

## NOTES-

1. SERIAL NUMBER AND IDENTIFICATION MARKING TO BE DONE BY SUPPLIER. SERIAL NUMBERING SYSTEM TO BE IN AGREEMENT WITH EH407691
2. SHIM OR FILL THIS SPACE IF NECESSARY TO PERMIT A MAXIMUM GAP OF .005.
3. PRESS CLOSURE TIGHT AGAINST CASE BEFORE WELDING.
4. MARK IDENTIFICATION "Cf252 1.15±.05 X $10^8$ N/SEC" ON EACH END. OTHER MARKING TO BE PER SPECIFICATIONS LISTED ON BILL OF MATERIAL.
5. CONSTRUCTION AND INSPECTION PER EH407691

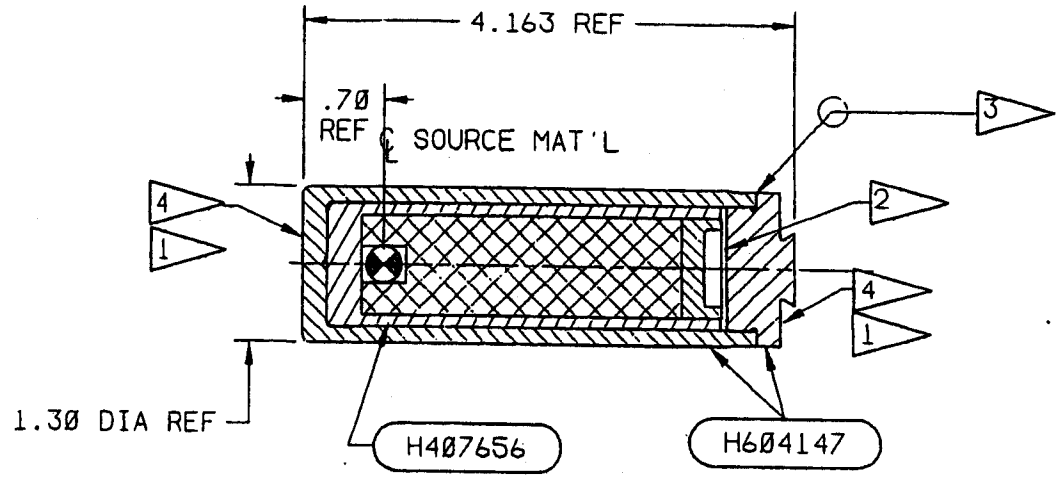


DH407655

| FINISH OR TREATMENT | | DET | QTY | MATERIAL |
|---|---|---|---|---|
| FILE CODE: NSR-R | CONFIDENTIAL AND TRADE SECRET - DO NOT DISCLOSE, USE OR REPRODUCE WITHOUT PRIOR WRITTEN APPROVAL FROM SCHLUMBERGER | | | SCHLUMBERGER WELL SERVICES<br>A DIVISION OF SCHLUMBERGER TECHNOLOGY CORPORATION |
| UNLESS OTHERWISE SPECIFIED<br>TOLERANCE DECIMALS / SURFACE FINISH 125 | DRN. R.E.HOOVER, JR. 20 AUG 85<br>DES. RIC HOOVER AUG 85<br>CKD. MIKE O-BRIEN 16 MAY 86<br>APP. J.S. HALL 16 MAY 86<br>P.E. MIKE O-BRIEN 16 MAY 86 | | | NSR-R NEUTRON SOURCE,<br>27 MILLICURIE, CF-252 |
| ANGLES<br>CONCENTRICITY TIR<br>INSIDE CORNERS R MAX<br>DIMENSIONS ARE IN INCHES<br>REMOVE BURRS. BREAK EDGES .005 MIN - .020 MAX<br>DIMENSIONS INCLUDE APPLIED FINISHES | | | | DH407655 REV. B |
| | | SCALE 1/1 | RELEASE JUL 15 1987 | SHT. 1 OF 1 |

LOT FILE : 06/04/87 OF DRAWING CELL 'DH407655' OF DATABASE 'USER28:[SAMERS.AACT]BH407655,3'

SHEET SIZE B

A&B.M.

JUL 15 1987

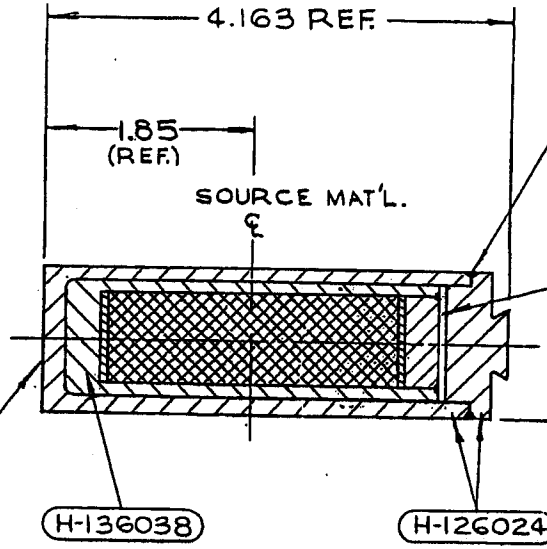


PRESS CLOSURE TIGHT AGAINST CASE BEFORE WELDING

SHIM OR FILL THIS SPACE, IF NECESSARY, TO PERMIT A MAX. GAP OF .005.

1.302 O.D. MAX. MACHINING AFTER WELDING PERMISSIBLE

PERMANENT IDENTIFYING MARKS ON EACH END. SEE NOTE #1

TREATED AFTER MACHINING

SEE ENG. SPECS. H-

DIMENSIONS AND TOLERANCES SHOWN APPLY TO FINISHED PART. ALLOWANCE FOR PLATING TO BE MADE BY MANUFACTURER.

## NOTES:

1. SERIAL NUMBER & IDENTIFICATION MARKING TO BE DONE BY SUPPLIER. SERIAL NUMBERING SYSTEM TO BE APPROVED BY S.W.S.

H-208295 USED ON

| DET | QTY | MATERIAL | APP. | SPEC MAT. COMP. & PROCESSES |
|---|---|---|---|---|

CONSTRUCTION & INSPECTION PER ENS H-209986 (A)

ENGINEERING APPROVED SUPPLIER: MONSANTO RESEARCH CO. DAYTON, OHIO OR NUMEC APOLLO, PA.

SOURCE ACTIVITY: 19.99 CURIE MAX. (A) (B)

SOURCE OUTPUT: $4.0^{+0.6}_{-0.0} \times 10^{7}$ N/SEC (C)

| | | | |
|---|---|---|---|
| C | 9/19/75 | LVS | ECN 52900 |
| B | 1-27-76 | LVS | ECN 42573 FEB 3 1976 |
| A | 8-12-75 | BH | ECN 39814 AUG 22 1975 |
| REV. | DATE | BY | DESCRIPTION |

REVISIONS

PROJECTS NSR-F

TOLERANCES UNLESS OTHERWISE SPECIFIED

| | | |
|---|---|---|
| 0 | ±.030 | CONCENTRICITY .010 T.I.R. |
| 00 | ±.015 | 125 ✓ ON ALL MACHINED SURFACES |
| 000 | ±.005 | |
| ANG. | ±½° | BREAK ALL CORNERS .015 MAX. .010 MIN. (R. OR 45°) |

DO NOT COPY, DISPLAY, OR USE DRAWING WITHOUT AUTHORIZATION — DO NOT SCALE DRAWING

DATA McCOY — APPROVED FOR RELEASE

CKD. — DES. ENGR. — PROD. ENGR.

DRN. RLS — DATE 1-26-68 — SCALE FULL

SCHLUMBERGER WELL SERVICES
A Division of Schlumberger Technology Corporation
HOUSTON, TEXAS

NEUTRON SOURCE, RADIOACTIVE (C)
Am-Be 16 CURIE

ASSY DWG. H-142108

UNIT-ASSY DWG. H-142108

FEB 2 1971 ©

SHEET SIZE B

NOV 20 1979

REF H-48222

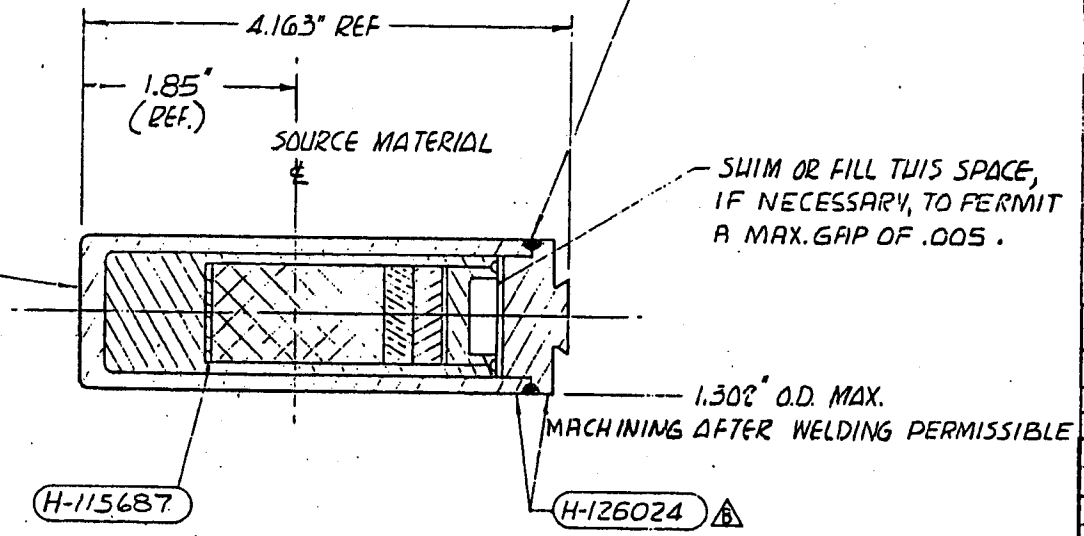


NOTES:

1. SERIAL NUMBER & IDENTIFICATION MARKING TO BE DONE BY SUPPLIER. SERIAL NUMBERING SYSTEM TO BE APPROVED BY S.W.S. MFGR'S IDENTIFICATION MARK PERMISSIBLE. (E)
2. SOURCE OUTPUT: $0.9^{+0.1}_{-0.0} \times 10^{7}$ N/SEC
   (F) MAX ACTIVITY: 7.99 CURIE

MATERIAL

(B) (F) CONSTRUCTION & INSPECTION PER ENS H-209986

ENGINEERING APPROVED SUPPLIERS:

(B) MONSANTO RESEARCH CO. DAYTON, OHIO

OR

NUMEC APOLLO, PA

| NO. | DATE | BY | DESCRIPTION |
|---|---|---|---|
| F | 9-19-79 | LVS | ECN 52900 |
| E | 1-18-72 | MC | ECN 19892 FEU 1 6172 |
| D | 2-24-70 | V.A. | ECN 15553 |
| C | 12-28-67 | RSB | ADDED "MACHINING AFTER...." SHIM NOTE WAS "SHIM OR FILL THIS SPACE WITH 3ST. TO PREVENT..." |
| B | 12-28-64 | VN | H-126026 H-126024 WAS H-113369 H-45779 |
| A | 10-15-63 | HK | ADD ALT. SUPPLIER |

REVISIONS

| PROJECTS | NLS-C | NLS-D | NLS-L |
|---|---|---|---|
| NLS-MD | NLS-ND | NSR-D | |

(D)

TOLERANCES UNLESS OTHERWISE SPECIFIED

| | | |
|---|---|---|
| 1.0 | ±.030 | CONCENTRICITY .010 T.I.R. |
| 1.00 | ±.015 | 125 ✓ ON ALL MACHINED SURFACES |
| 1.000 | ±.005 | |
| ANG. | ±½° | BREAK ALL CORNERS .015 MAX. .010 MIN. (R. OR 45°) |

DO NOT COPY, DISPLAY, OR USE DRAWING WITHOUT AUTHORIZATION — DO NOT SCALE DRAWING

| | | |
|---|---|---|
| DATA MOSER | CKD. | APP. |
| DWN. Adnot | DATE 5-2-62 | SCALE Full |

SCHLUMBERGER WELL SURVEYING CORP.
HOUSTON, TEXAS

(F) (D) NEUTRON SOURCE, RADIOACTIVE
Am-Be 5 CURIE

H-208286

WHERE USED

ASSEMBLY DWG. H-115686

(M)

NOV 20 1979

NOTES:

1. SERIAL NUMBER & IDENTIFICATION MARKING TO BE DONE BY SUPPLIER. SERIAL NUMBER TO BE SUPPLIED BY OFFICE OF CORPORATION RADIATION SAFTEY OFFICER.
2. SOURCE OF MATERIAL IS STORED NSR-F.
3. INSPECTION AS PER SH209986.

SOURCE ACTIVITY:

19.99 CURIE MAX.

SOURCE OUTPUT:

$4.0 \; {}^{+0.6}_{-0.0} \times 10^{7}$ N/SEC

H357068

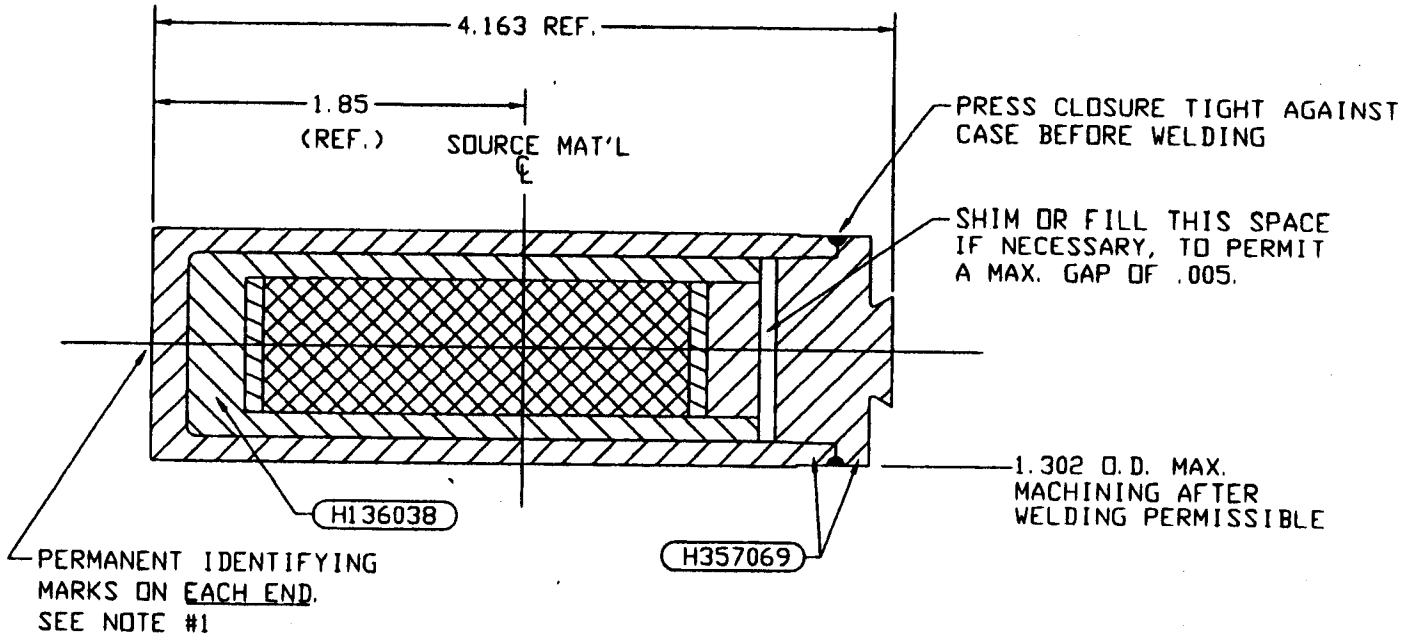


ENGINEERING APPROVED SUPPLIER:

GAMMATRON, INC.
5703 Etheridge
Houston, TX 77087
713-641-3640

| FINISH OR TREATMENT | | | DET | QTY | MATERIAL |
|---|---|---|---|---|---|
| FILE CODE NSR-FC | CONFIDENTIAL AND TRADE SECRET - DO NOT DISCLOSE, USE OR REPRODUCE WITHOUT PRIOR WRITTEN APPROVAL FROM SCHLUMBERGER | | | | SCHLUMBERGER WELL SERVICES |
| UNLESS OTHERWISE SPECIFIED<br>TOLERANCE DECIMALS: .X ±.030, .XX ±.015, .XXX ±.005<br>SURFACE FINISH 125√<br>ANGLES ± .5°<br>CONCENTRICITY .010 TIR<br>INSIDE CORNERS R MAX<br>DIMENSIONS ARE IN INCHES<br>REMOVE BURRS<br>BREAK EDGES .005 MIN, .020 MAX<br>DIMENSIONS INCLUDE APPLIED FINISHES | DRN JT MORRISON | 1-26-98 | | | NUETRON SOURCE, RADIOACTIVE, RECYCLED<br>Am-Be 16 CURIE |
| | DES | | | | |
| | CKD J M BATES | 1-26-98 | | | |
| | APP J M BATES | 1-26-98 | | | H357068 REV AA |
| | PLC J M BATES | 1-26-98 | | | |
| | | | | | SCALE 2-1 WT (LBS) SHT 1 OF |

NOTES:

1. SERIAL NUMBER & IDENTIFICATION MARKING TO BE DONE BY SUPPLIER. SERIAL NUMBER TO BE SUPPLIED BY OFFICE OF CORPORATION RADIATION SAFETY OFFICER.
2. SOURCE OUTPUT: $0.9 \, {}^{+0.1}_{-0.0} \times 10^{7}$ N/SEC
   MAX ACTIVITY: 7.99 CURIE
3. ALTERNATE PART IS H126024.
4. SOURCE MATERIAL IS STORED NSR-D.

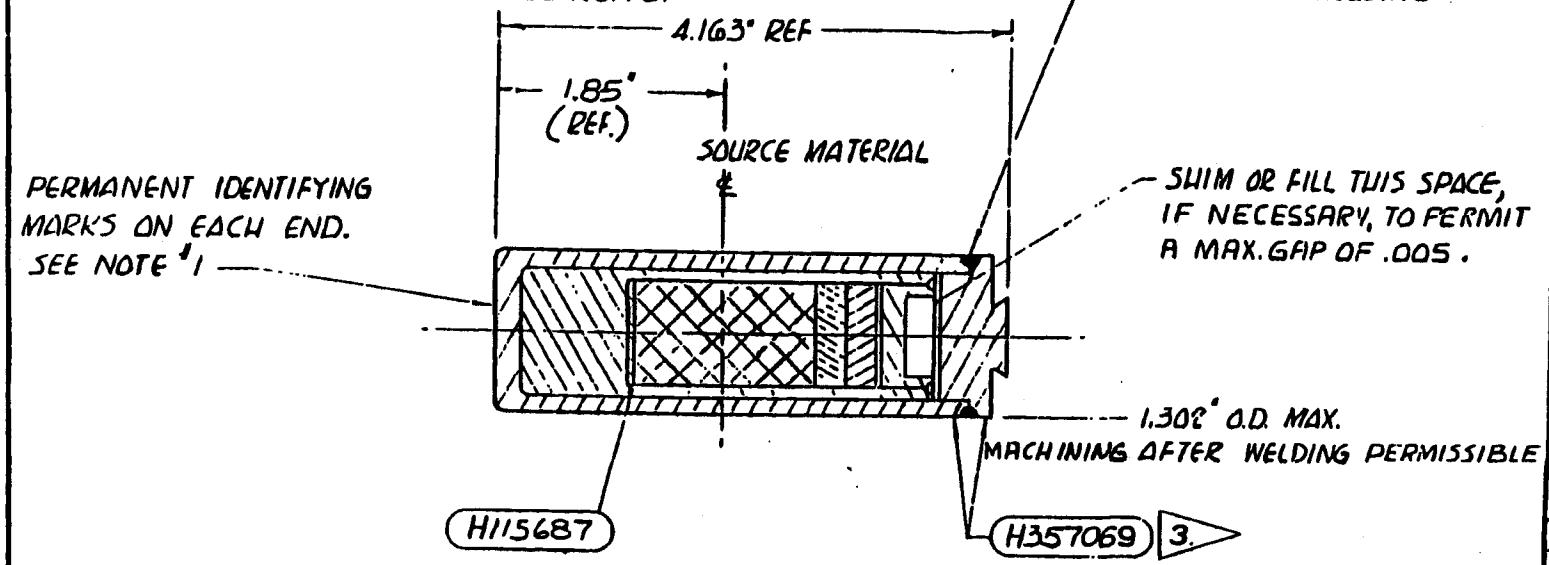


H-208286

WHERE USED

MATERIAL

CONSTRUCTION & INSPECTION PER ENS SH209986

ENGINEERING APPROVED SUPPLIERS:

GAMMATRON, INC.
5703 Etheridge
Houston, TX 77087
713-641-3640

| No. | DATE | BY | DESCRIPTION |
|---|---|---|---|
| A | 2-9-98 | JTM | ECN# N18950 |

REVISIONS

| PROJECTS | NSR-DB | | |
|---|---|---|---|

TOLERANCES UNLESS OTHERWISE SPECIFIED

| | | |
|---|---|---|
| 1.0 | ±.030 | CONCENTRICITY .010 T.I.R. |
| 1.00 | ±.010 | 125 ON ALL MACHINED SURFACES |
| 1.000 | ±.005 | |
| ANG. | ±½° | BREAK ALL CORNERS .015 MAX. .010 MIN. (R. OR 45°) |

DO NOT COPY, DISPLAY, OR USE DRAWING WITHOUT AUTHORIZATION — DO NOT SCALE DRAWING

| | | |
|---|---|---|
| DATA | CKD. BATES | APP. BATES |
| DWN. JTM | DATE 2-9-98 | SCALE FULL |

SCHLUMBERGER WELL SURVEYING CORP.
HOUSTON, TEXAS

NEUTRON SOURCE, RADIOACTIVE (RECYCLED) Am-Be 5 CURIE

ASSEMBLY DWG. H357074