U.S. Department of Transportation
Research and Special Programs Administration

400 Seventh St., S.W.
Washington, D.C. 20590

IAEA CERTIFICATE OF COMPETENT AUTHORITY
SPECIAL FORM RADIOACTIVE MATERIALS
CERTIFICATE NUMBER USA/0135/S, REVISION 8

This certifies that the sources described have been demonstrated to meet the regulatory requirements for special form radioactive material as prescribed in the regulations of the International Atomic Energy Agency[1] and the United States of America[2] for the transport of radioactive materials.

1. Source Identification - Model Nos. NSR-M and NSR-L.

2. Source Description - All inner capsules authorized by this certificate are of 304 stainless steel. The NSR-M outer capsule has a diameter of 19 mm (0.75") and a length of 123 mm (4.84"); the NSR-L outer capsule has a diameter of 25 mm (0.98") and a length of 123 mm (4.84"). Outer capsules are constructed of 18% Ni maraging steel (MS), or of MP35N alloy. Sources must be manufactured in accordance with attached SWS drawings H-245258 (NSR-M with MS); H-239681 (NSR-L with MS); H-357072 (NSR-M with MP35N); and H-357070 (NSR-L with MP35N). All NSR-M and NSR-L sources manufactured after Dec. 31, 1999 must be manufactured in accordance with SWS drawings H-357072 and H-357070, respectively.

3. Radioactive Contents - These neutron sources are authorized to contain Am-241 oxide mixed with beryllium powder in pellet form with activities not exceeding 0.74 TBq (20 Ci).

4. Quality Assurance - Records of Quality Assurance activities required by Paragraph 310 of the IAEA regulations[1] shall be maintained and made available to the authorized officials for at least three years after the last shipment authorized by this certificate. Consignors and consignees in the United States exporting or importing shipments under this certificate shall satisfy the requirements of Subpart H of 10 CFR 71.

5. Expiration Date - This certificate expires December 10, 2006. On February 25, 2002, this certificate supersedes, in its entirety, all previously issued revisions of USA/0135/S.

---

1 "Regulations for the Safe Transport of Radioactive Material, 1996 Edition (Revised), No. TS-R-1 (ST-1, Revised)," published by the International Atomic Energy Agency (IAEA), Vienna, Austria.

2 Title 49, Code of Federal Regulations, Parts 100 - 199, United States of America.

CERTIFICATE USA/0135/S, REVISION 8

This certificate is issued in accordance with paragraph 804 of the IAEA Regulations and Section 173.476 of Title 49 of the Code of Federal Regulations, in response to the petition and information dated December 7, 2001 submitted by Schlumberger Technology Corporation, Sugar Land, TX, and in consideration of other information on file in this Office.

Certified by:

for Robert A. McGuire
Associate Administrator for
Hazardous Materials Safety

DEC 10 2001
(DATE)

Revision 8 - Issued to revise contents and extend the expiration date.

NOTES: 1. SERIAL NUMBER & IDENTIFICATION STAMPING TO BE DONE BY SUPPLIER. SERIAL NUMBERING SYSTEM TO BE APPROVED BY SWS.

2. CONSTRUCTION & INSPECTION PER H-209986.

3. ENGINEERING APPROVED FABRICATOR: MONSANTO RESEARCH CORP. OR NUMEC, APOLLO PA.

B A 4. SOURCE OUTPUT: $2.4^{+0.36}_{-0.00} \times 10^{7}$ N/SEC

MAX ACTIVITY: 19.99 CURIE

REVISIONS			
LTR	DESCRIPTION	DATE	BY
A	ECN 52900	9-19-79	LVS
B	ECN 53537	1-16-80	GL

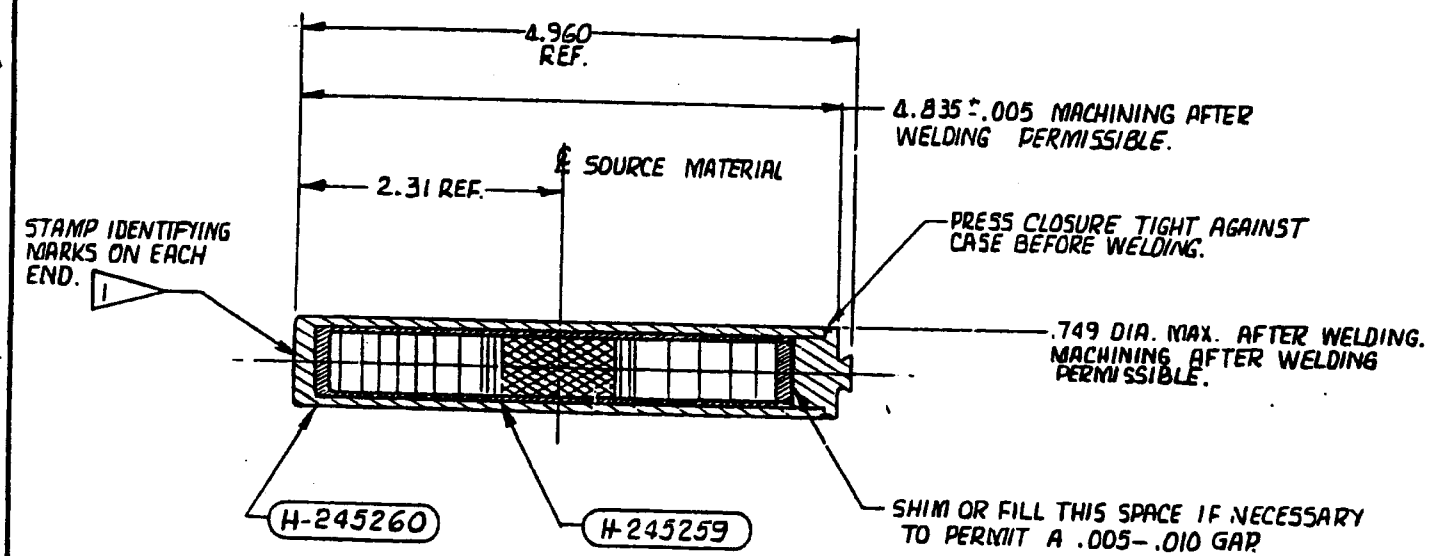

H-245258

FINISH OR TREATMENT			DET.	QTY.	MATERIAL
PROJECTS NSR-M					SCHLUMBERGER WELL SERVICES A Division of Schlumberger Technology Corporation HOUSTON, TEXAS
DO NOT COPY, DISPLAY, OR USE DRAWING WITHOUT AUTHORIZATION — DO NOT SCALE DRAWING					
UNLESS OTHERWISE SPECIFIED	DRN. V.H. ADAMS	6-8-76	NEUTRON SOURCE RADIOACTIVE Am Be SOURCE 10 CURIE A		
TOLERANCES DECIMALS / SURFACE FINISH 125 ✓	DES. GORSKY	6-8-76			
	CKD. [signature]	1/12/78			
ANGLES	ENGR. GORSKY	6-8-76	SEPARATE BILL MATL. ☑	H-245258	REV B
	APP. K E Royal	1/13/78			
	REL/STDS. A.B. Tuyen	1/13/78	SCALE 1/1	REVISED APR 26 1979	SHT 1 OF 1

H-245267

WHERE USED

SHEET SIZE B

NOTES: 1 SERIAL NUMBER & IDENTICATION STAMPING TO BE DONE BY SUPPLIER.
SERIAL NUMBERING SYSTEM TO BE APPROVED BY SWS

2. CONSTRUCTION & INSPECTION PER H-209986
3. ENGINEERING APPROVED FABRICATOR: MONSANTO RESEARCH CORP. OR NUMEC, APOLLO P.A.
4. SOURCE ACTIVITY NOT TO EXCEED 19.99 CURIES.
5. (A) SOURCE OUTPUT : $4.0^{+0.6}_{-0.0} \times 10^7$ N/SEC.

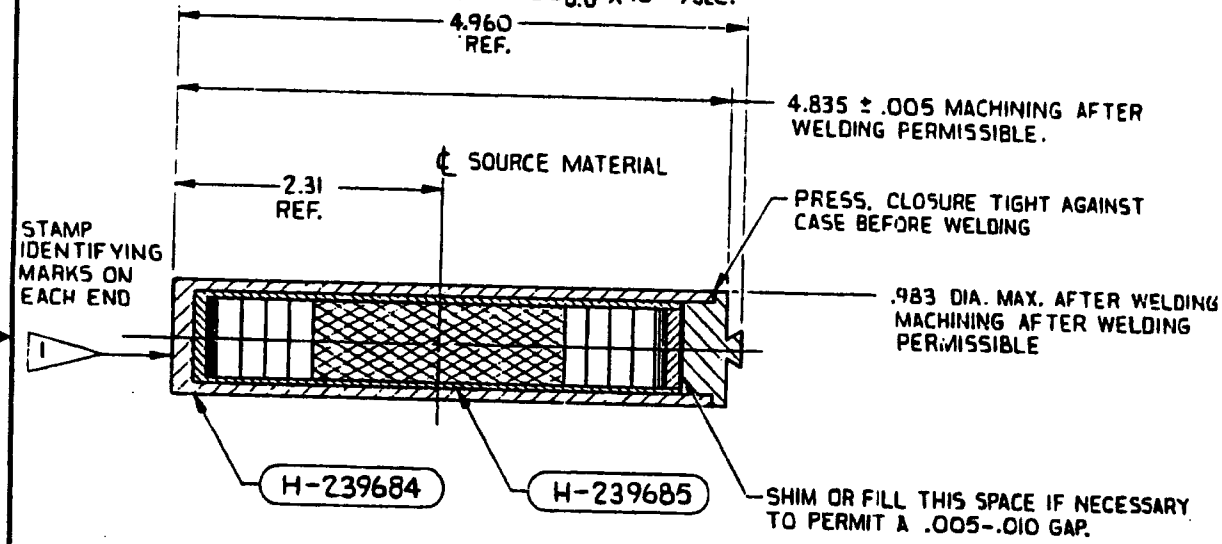

REVISIONS			
LTR	ECN NO.	DATE	BY
A	52900	9-19-79	LVS

H-239681

FINISH OR TREATMENT		DET.	QTY.	MATERIAL
FILE CODE	NSR-L			

UNLESS OTHERWISE SPECIFIED
TOLERANCES DECIMALS — SURFACE FINISH 125
ANGLES
INSIDE CORNERS ____ R MAX
DIMENSIONS ARE IN INCHES
REMOVE BURRS, BREAK EDGES .005 MIN-.020 MAX
DIMENSIONS INCLUDE APPLIED FINISH

DO NOT COPY, DISPLAY, OR USE DRAWING WITHOUT AUTHORIZATION

DRN E. MARTINEZ 2-17-76
DES.
CKD.
ENGR. R.P. Zimmerman 5/28/76
APP.
MFL/STDS S.T. Ducker 5/19/76

SCHLUMBERGER WELL SERVICES
A DIVISION OF SCHLUMBERGER TECHNOLOGY CORPORATION

NEUTRON SOURCE RADIOACTIVE AM BE SOURCE, 16 CURIE (A)

B/M ✓ | H-239681 | REV A
SCALE 1/1 | RELEASED FEB 2 1 1979 | SHT 1 OF 1

H-239690
WHERE USED

NOTES: 1 SERIAL NUMBER & IDENTIFICATION MARKING TO BE DONE BY SUPPLIER. SERIAL NUMBER TO BE SUPPLIED BY OFFICE OF CORPORATION RADIATION SAFETY OFFICER.

2. CONSTRUCTION & INSPECTION PER SH209986.

3. SOURCE OUTPUT: $2.4^{+0.36}_{-0.00} \times 10^{7}$ N/SEC

MAX ACTIVITY: 19.99 CURIE

REVISIONS			
LTR	DESCRIPTION	DATE	BY
A	ECN# N18950	2-9-98	JTM

ENGINEERING APPROVED SUPPLIER:
GAMMATRON, INC.
5703 ETHERIDGE
HOUSTON, TX 77087
713-641-3640

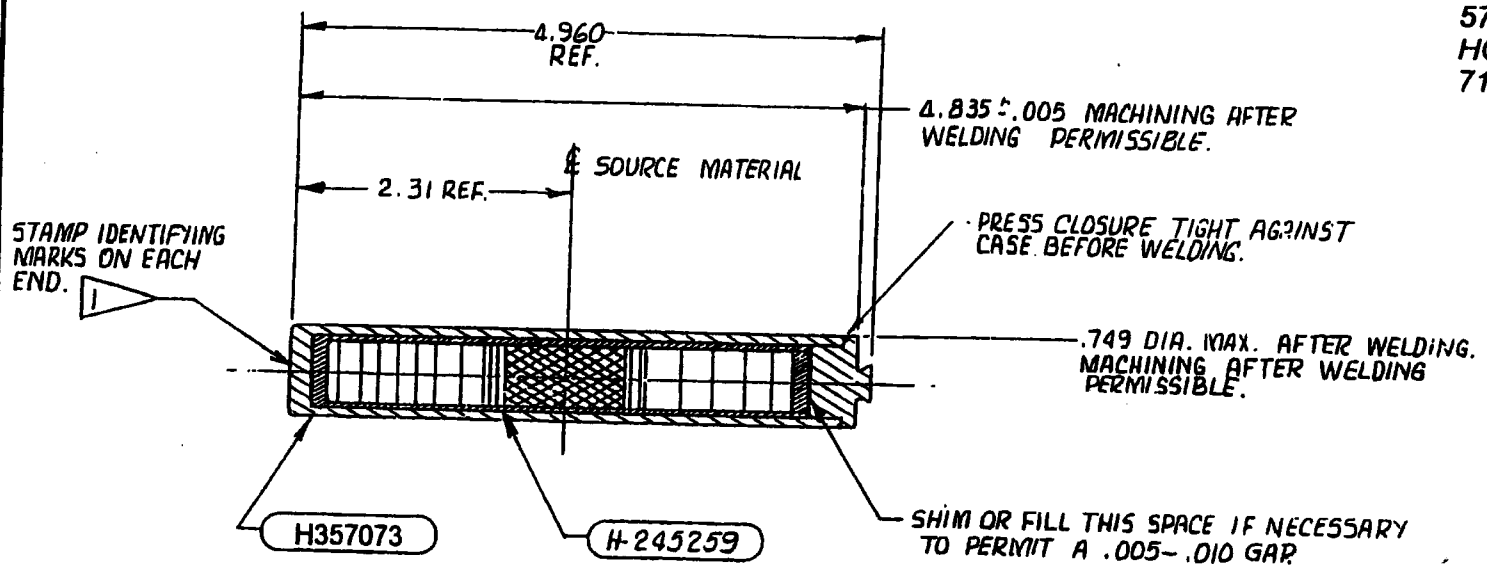

H357072

FINISH OR TREATMENT			DET.	QTY.	MATERIAL
PROJECTS	NSR-MB				

DO NOT COPY, DISPLAY, OR USE DRAWING WITHOUT AUTHORIZATION — DO NOT SCALE DRAWING

SCHLUMBERGER WELL SERVICES
A Division of Schlumberger Technology Corporation
HOUSTON, TEXAS

UNLESS OTHERWISE SPECIFIED

TOLERANCES DECIMALS — SURFACE FINISH 125 ✓ — ANGLES — INSIDE CORNERS ____ R. MAX. REMOVE BURRS AND BREAK EDGES .005 MIN. SWS WORKMANSHIP STANDARDS APPLY

DRN.	J T MORRISON	2-9-98
DES.		
CKD.	J M BATES	2-9-98
ENGR.	J M BATES	2-9-98
APP	J M BATES	2-9-98
REL/STDS	J M BATES	2-9-98

NEUTRON SOURCE RADIOACTIVE
Am Be SOURCE (RECYCLED)
10 CURIE

SEPARATE BILL MAT'L ☑ — H357072 — REV AA

SCALE 1/1 — RELEASED — SHT 1 OF 1

H329768
WHERE USED

SHEET SIZE B

NOTES: 1 SERIAL NUMBER & IDENTICATION MARKING TO BE DONE BY SUPPLIER. SERIAL NUMBER TO BE SUPPLIED BY OFFICE OF CORPORATION RADIATION SAFETY OFFICER.

2. CONSTRUCTION & INSPECTION PER SH209986
3. SOURCE ACTIVITY NOT TO EXCEED 19.99 CURIES.
4. SOURCE OUTPUT : $4.0^{+0.6}_{-0.0} \times 10^{7}$ N/SEC.

REVISIONS			
LTR	ECN NO.	DATE	BY
A	N18950	2-6-98	J T MORRISON

ENGINEERING APPROVED SUPPLIER:
GAMMATRON, INC.
5703 ETHERIDGE
HOUSTON, TX 77087
713-641-3640

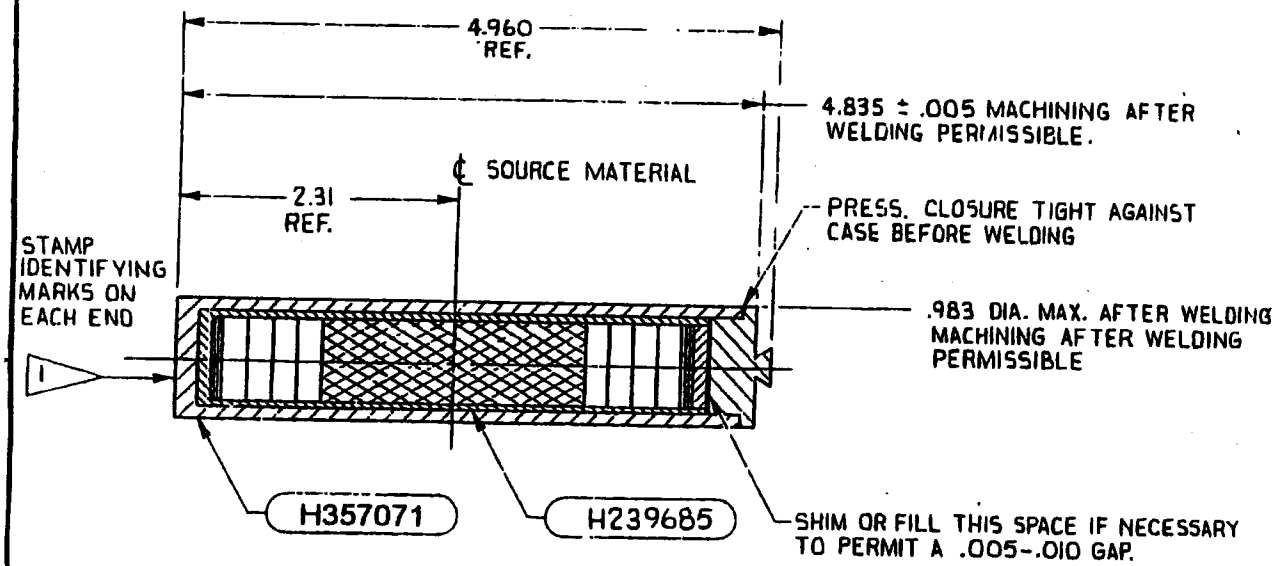

FINISH OR TREATMENT	DET.	QTY.	MATERIAL
FILE CODE NSR-LB			SCHLUMBERGER WELL SERVICES A DIVISION OF SCHLUMBERGER TECHNOLOGY CORPORATION
UNLESS OTHERWISE SPECIFIED TOLERANCES DECIMALS SURFACE FINISH 125 √ ANGLES INSIDE CORNERS ____ R MAX DIMENSIONS ARE IN INCHES REMOVE BURRS, BREAK EDGES .005 MIN- .020 MAX DIMENSIONS INCLUDE APPLIED FINISH			NEUTRON SOURCE RADIOACTIVE AM BE SOURCE, 16 CURIE (RECYCLED SOURCE)
DO NOT COPY, DISPLAY, OR USE DRAWING WITHOUT AUTHORIZATION			
DRN. J T MORRISON 2-6-98			
DES.			
CKD. J M BATES 2-6-98			
ENGR. J M BATES 2-6-98	B/M ✓		H357070 REV AA
APP J M BATES 2-6-98			
REL/RTDS J M BATES 2-6-98	SCALE 1/1	RELEASED	SHT 1 OF 1

H329762
WHERE USED

SHEET SIZE B