U.S. Department
of Transportation
**Research and
Special Programs
Administration**

400 Seventh St., S.W.
Washington, D.C. 20590

IAEA CERTIFICATE OF COMPETENT AUTHORITY
SPECIAL FORM RADIOACTIVE MATERIALS
CERTIFICATE NUMBER USA/0161/S, REVISION 2

This certifies that the source described has been demonstrated to meet the regulatory requirements for special form radioactive material as prescribed in the regulations of the International Atomic Energy Agency[1] and the United States of America[2] for the transport of radioactive materials.

1. Source Identification - New England Nuclear Model NER-550.

2. Source Description - The source described by this certificate is a TIG welded doubly encapsulated source constructed of Type 316L stainless steel. It has a diameter of 0.70 cm (0.275 in) to 2.54 cm (1.0 in), and length 0.953 cm (0.375 in) to 3.81 cm (1.5 in). Minimum wall thickness of inner and outer capsules is 0.0635 cm (0.025 in), and minimum plug thickness for each capsule is 0.127 cm (0.05 in). Source construction must be in accordance with New England Nuclear Corporation Drawing No. 313-26, Revision A (attached).

3. Radioactive Contents - This neutron source consists of not more than 37 GBq (1.0 Ci) of Am-241 in the form of americium oxide, mixed with beryllium powder and compressed into a pellet.

4. Quality Assurance - Records of Quality Assurance activities required by Paragraph 310 of the IAEA regulations[1] shall be maintained and made available to the authorized officials for at least three years after the last shipment authorized by this certificate. Consignors and consignees in the United States exporting or importing shipments under this certificate shall satisfy the requirements of Subpart H of 10 CFR 71.

5. Expiration Date - This certificate expires July 31, 2007.

---

1 "Regulations for the Safe Transport of Radioactive Material, 1996 Edition (Revised), No. TS-R-1 (ST-1, Revised)," published by the International Atomic Energy Agency (IAEA), Vienna, Austria.

2 Title 49, Code of Federal Regulations, Parts 100 - 199, United States of America.

CERTIFICATE USA/0161/S, REVISION 2

This certificate is issued in accordance with paragraph 804 of the IAEA Regulations and Section 173.476 of Title 49 of the Code of Federal Regulations, in response to the petition and information dated September 27, 2001 and December 27, 2001 submitted by J. L. Shepherd & Associates, San Fernando, CA, and in consideration of other information on file in this Office.

Certified by:

for Robert A. McGuire
Associate Administrator for
Hazardous Materials Safety

JUL 24 2002
(DATE)

Revision 2 - Issued to reference the 1996 IAEA regulations and to extend the expiration date.

DATE	SYM	REVISION RECORD	AUTH.	DR.	CK.
1/12/72		REDRAWN		J.S.	
8/18/72	A	ADD SPECIAL TEST NOTES		J.S.	

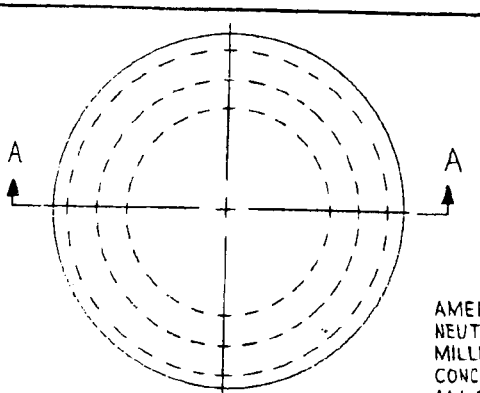

PLAN VIEW

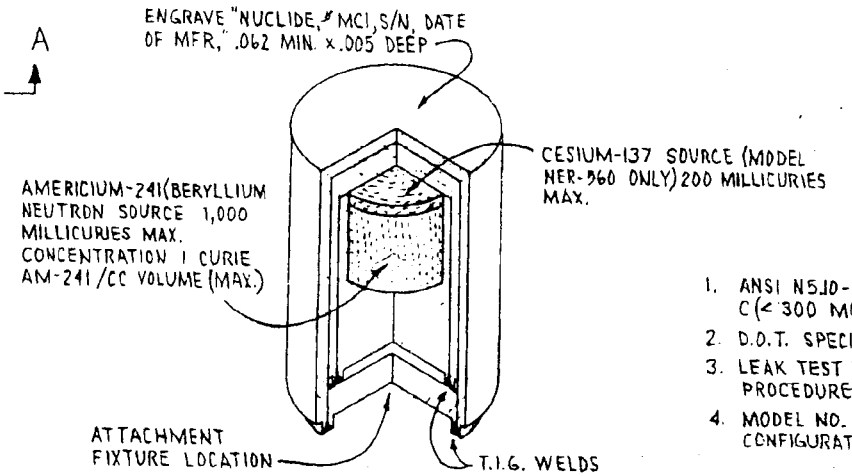

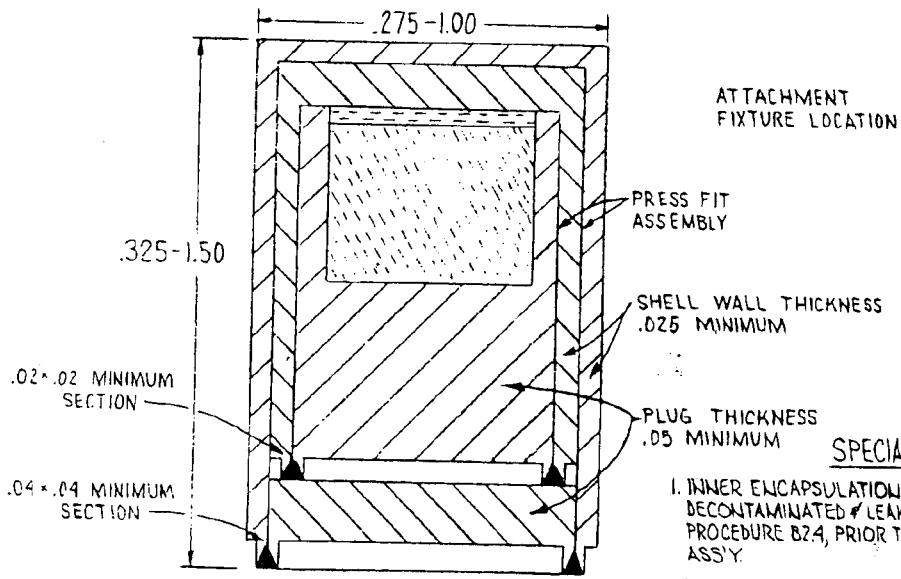

SECTION A-A

NOTES

1. ANSI N5.10-1968 PERFORMANCE CLASSIFICATION C (< 300 MCI) OR E 54434
2. D.O.T. SPECIAL FORM PER 10 CFR 71.4
3. LEAK TEST PER ANSI N5.10-1968 PROCEDURES B2.1 AND B2.4
4. MODEL NO. WITH SUFFIX (-1 ETC.) FOR EACH CONFIGURATION AND SIZE.

RADIATIONS

$2.2-2.5 \times 10^3$ NEUTRONS/SEC./MCI AM-241
0.32 MR/HR./MCI CS-137 AT 1 METER (NER-560 ONLY)

CAPSULE MAT'L CRES 316L STAINLESS STEEL

SPECIAL TEST NOTES (A)

1. INNER ENCAPSULATION ASS'Y TO BE THOROUGHLY DECONTAMINATED & LEAK TESTED PER ANSI N5.10-1968 PROCEDURE B2.4, PRIOR TO ENCAPSULATION IN OUTER ASS'Y.
2. PRODUCTION LEAK TEST B2.1 PER NOTE 3 TO BE MADE AFTER WELDING. HOLD SOURCE 7 DAYS MIN. & RETEST PER PROCEDURE B2.1. SMEAR TEST LIMIT 1×10^{-9} µCI AM-241 & CS-137.
3. ASSAY SMEARS FOR AM-241 BY ALPHA I.P.C. & CS-137 BY L.S.C.

TOLERANCES (EXCEPT AS NOTED)	NEW ENGLAND NUCLEAR CORP.		
DECIMAL ± .005		SCALE N.T.S.	DRAWN BY J. SUMARES; APPROVED BY
FRACTIONAL ± 1/64	TITLE NER-550 NEUTRON SOURCE & NER-560 NEUTRON GAMMA SOURCE		
ANGULAR ± 30'	DATE 12-3-71	DRAWING NUMBER 313-26	A