U.S. Department of Transportation
Research and Special Programs Administration

400 Seventh Street, S.W.
Washington, D.C. 20590

IAEA CERTIFICATE OF COMPETENT AUTHORITY
SPECIAL FORM RADIOACTIVE MATERIAL
CERTIFICATE NUMBER USA/0166/S, REVISION 8

This certifies that the sources described have demonstrated their ability to meet the regulatory requirements for special form radioactive material as prescribed in the regulations of the International Atomic Energy Agency[1] and United States of America[2] for the transport of radioactive materials.

1. Source Identification - Gamma Industries Model Nos. VD, VD(HP), NB, NBG, NB(HP), single encapsulation universal source, double encapsulation universal source, and single encapsulation with side weld. All sources authorized by this certificate shall have been manufactured prior to August 1, 1993.

2. Source Description - the sources authorized by this certificate are described, and have been manufactured in accordance with, the referenced and attached Gamma Industries drawings.

Gamma Industries Model No.	Drawing No.
VD and VD(HP)	602-7001-004
NB, NBG, NB(HP)	602-7001-005
Universal source, single encapsulation	602-7001-006
Universal source, double encapsulation	602-7001-007
Single encapsulation with side weld	602-7001-008

All sources capsules are welded encapsulations constructed of 300 series stainless steel or ARMCO Type 17-4PH stainless steel.

3. Radioactive Contents -

Gamma Industries Model No.	Authorized Contents
VD and VD(HP)	11.1 Tbq (300 Ci) of any one of the following:

Barium-131	Manganese-54
Cadmium-109	Phosphorus-32
Calcium-45	Rubidium-86
Calcium-47	Selenium-75
Caesium-137	Strontium-85
Chlorine-36	Thallium-204
Chromium-51	Thulium-170
Iridium-192	Tin-113
Cobalt-60	Ytterbium-169
Iron-59	Zinc-65

[1] "Safety Series No. 6, Regulations for the Safe Transport of Radioactive Materials, 1985 edition, as amended," published by the International Atomic Energy Agency (IAEA), Vienna, Austria.

[2] Title 49, Code of Federal Regulations, Parts 100 - 199, United States of America.

CERTIFICATE USA/0166/S, REVISION 8

3. Radioactive Contents (Continued) -

Gamma Industries Model No.	Authorized Contents
NB, NBG, NB(HP)	0.93 TBq (25 Ci) of Americium-241 **OR** 1.1 GBq (30 mCi) of Radium-226 **OR** 18.5 GBq (500 mCi) of an Americium-241 and Caesium-137 mixture.
Universal source, single encapsulation	18.5 TBq (500 Ci) of Iridium-192 **OR** 0.74 TBq (20 Ci) of Cobalt-60
Universal source, double encapsulation	185 TBq (5000 Ci) of Iridium-192 **OR** 74 TBq (2000 Ci) of Cobalt-60
Single encapsulation with side weld	18.5 TBq (500 Ci) of Iridium-192 **OR** 0.74 TBq (20 Ci) of Cobalt-60

4. Quality Assurance - Records of Quality Assurance activities required by Paragraph 209 of the IAEA[1] regulations shall be maintained and made available to the authorized officials for at least three years after the last shipment authorized by this certificate. Consignors and consignees in the United States exporting or importing shipments under this certificate shall satisfy the requirements of Subpart H of 10 CFR 71.

5. Expiration Date - This certificate expires on September 1, 2002.

This certificate is issued in accordance with paragraph 703 of the IAEA Regulations and Section 173.476 of Title 49 of the Code of Federal Regulations, in response to the May 16, 1997 petition submitted by Amersham Corporation of Burlington, MA, and in consideration of other information on file in this Office.

Certified by:

SEP - 3 1997

Alan I. Roberts
Associate Administrator for Hazardous Materials Safety

(DATE)

Revision 8 - Issued to approve capules against the 1985 IAEA regulations, and extend the expiration date of the previous certificate.

THE OUTER CAPSULE IS TO BE INSCRIBED AS FOLLOWS:

GI _____ (MODEL NO)
_____ (ISOTOPE)
_____ (CURIES)
_____ (SERIAL NO)

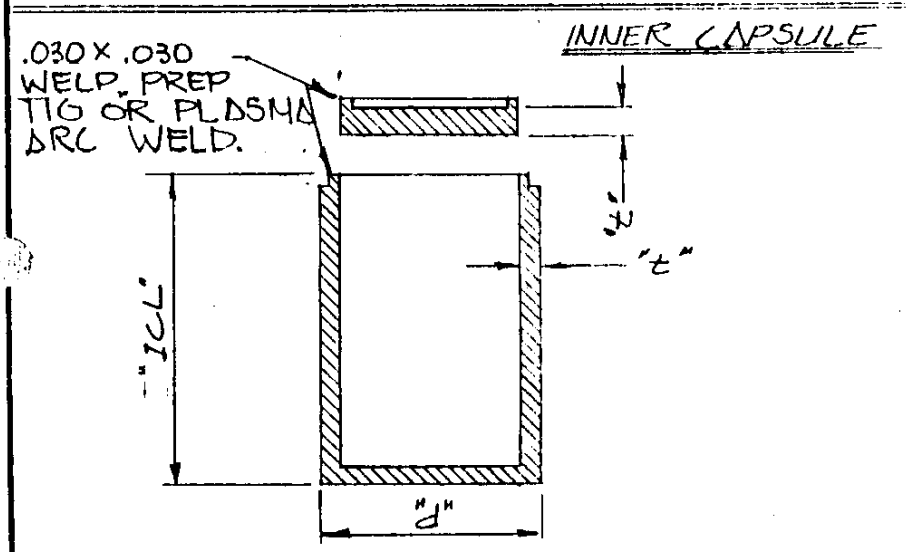

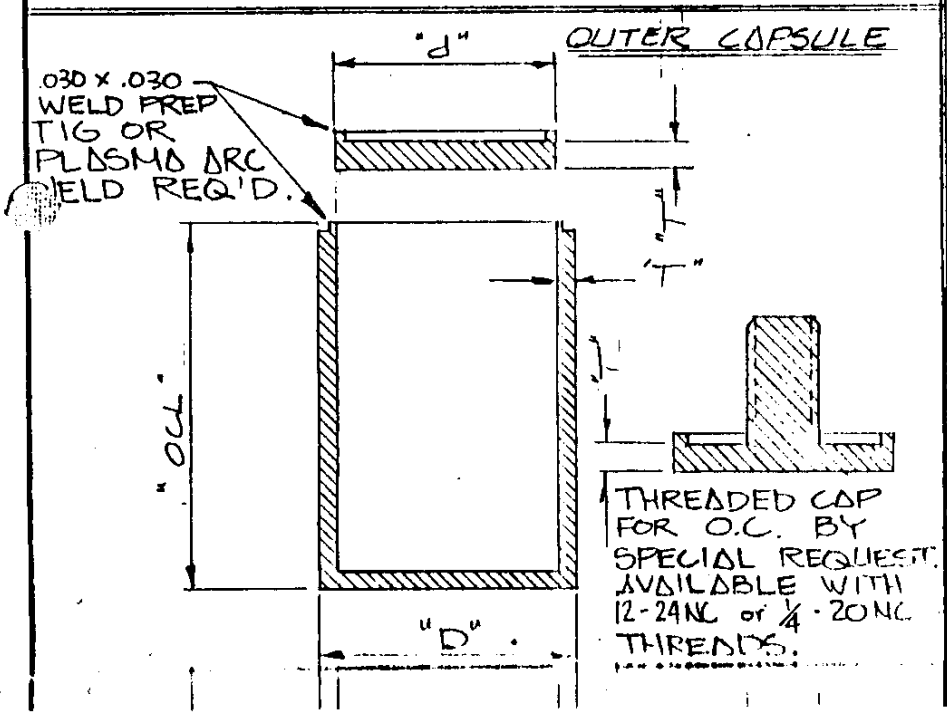

"t" IC Wall Th.	"T" OC Wall Th.	"d" OD-IC	"D" OD-OC	OCL	ICL	Other
MODEL VD						
.010 Min	.010 Min	0.125" Mn	.145" Mn.	.250" Mn	.230" Mn	See Note #1
		2.000" Mx	2.060" Mx.	6.000"Mx	5.90" Mx	
MODEL VD (HP)						
*1	*2	0.125" Mn		.250" Mn	.230" Mn	
		2.000" Mx	2.43" Mx	6.000"Mx	5.800"Mx	

*1 "t" = 0.050 d" + .007
*2 "T" = 0.1075 "D"

NOTES:
Note #1:
Model VD sources may employ .002" caps for beta sources. Am-241 sources shall use .010" minimum wall. Ir-192, Cs 137 sources shall employ 0.030" minimum wall.

GAMMA INDUSTRIES; BR, LA.

SCALE: NONE	APPROVED BY: M. Riddle	DRAWN BY HAL
DATE: 6-20-79		REVISED

SOURCE MODELS VD & VD (HP)

MULTIPURPOSE CAPSULE:
241 Am (250 mCi), ANY β, γ (300 Ci)
Cs, 108, Ir, Tl, 170

DRAWING NUMBER 602-7001-004

THE OUTER CAPSULE SHALL BE INSCRIBED AS FOLLOWS:

G.I. _____ (MODEL NO.)
_____ (ISOTOPE)
_____ (CURIES)
_____ (SERIAL NO.)

INNER CAPSULE

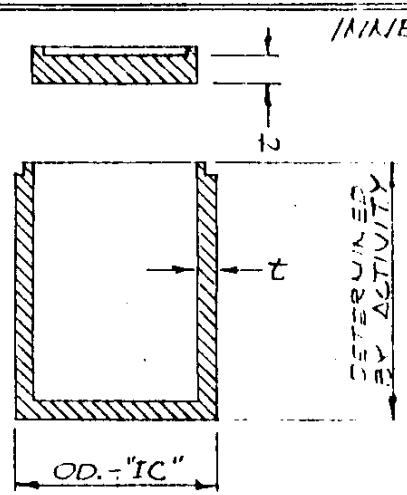

OUTER CAPSULE

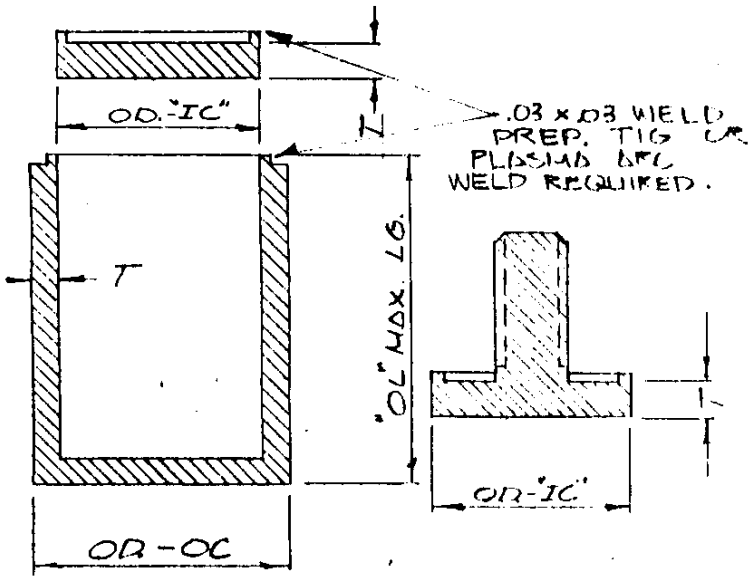

MODEL NB Activity	OD.-"OC"	"OL" Max. Lg.	Outer Capsule Wall "T" Min.	Inner Capsule Wall "t" Min.
0-3 Ci	.200-.500	.500	.040	.040
3-6 Ci	.500-1.00	1.50	.060	.040
6-10 Ci	1.00-1.50	2.50	.070	.040
10-25 Ci	1.50-2.00	3.0"	.080	.040
MODEL NBG				
500 mCiAm 100 mCiCs	.200-1.00	1.50	.040	.040
MODEL NB (HP)				
1 Ci	up to .500	3 x OD	.050	.040
2 Ci	.501-.625	3 x OD	.070	.050
4 Ci	.626-.750	3 x OD	.095	.060
8 Ci	.751-.875	3 x OD	.110	.070
12 Ci	.875-1.00	3 x OD	.120	.080
20 Ci	1.000-1.50	4 inch	.120	.080
25 Ci	1.25-2.00	4 inch	.120	.080

NOTES:

Note #1: Inner & outer capsules fabricated from 304 or 316 stainless steel.

Note #2: Model NB (HP) is for high pressure 25,000 psi and high temperature +595 degrees C applications.

Note #3: Cap thickness will be at minimum the wall thickness.

Note #4: Inner & outer capsules shall be Helium pressure bubble tested.

Note #5: Outer cap may be extended & taped or threaded 12-24 NC or 1/4-20NC.

GAMMA INDUSTRIES; BR, LA.

SCALE: NONE	APPROVED BY:	DRAWN BY HAL
DATE: 6-21-79	M. Riccio	REVISED

SOURCE CAPSULE MODELS; NB, NBG, NB(HP)

GAMMA & NEUTRON SOURCES FOR USE IN LOGGING INSTRUMENTS, ETC.: Am-Be (75 Ci), Ra-Be (200 mCi); Sb-Be-Cs (500 mCi)

DRAWING NUMBER 602-7001-005

DRAFTBACK 330

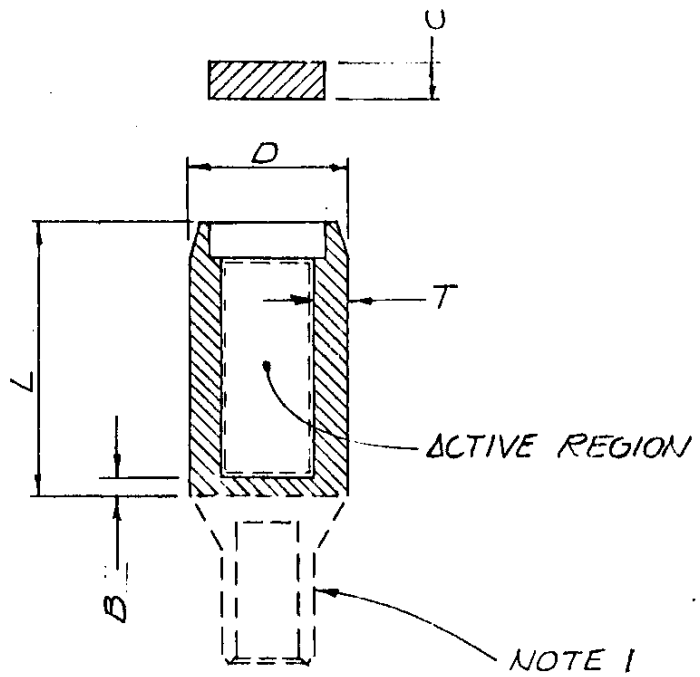

"B"	"D"	"C"	"T"	"L"	L/D
.100 Min	.187 Min	.130 Min	.030 Min	1.00 Max	5.4 Max

Note 1: Attachments to this capsule may be made by swedging or threading the outlined appendage. Such attachments shall not impair or reduce the structural soundness of the encapsulation. Examples of applications are; Radiography source assemblies, Survey instrument calibrators, et. al.

GAMMA INDUSTRIES ; BR , LA.

SCALE: NONE	APPROVED BY: M. Kudari	DRAWN BY HAL
DATE: 6-22-79		REVISED

SINGLE ENCAPSULATION UNIVERSAL SOURCE

^{192}Ir (500 Ci) , ^{60}Co (80 Ci)

DRAWING NUMBER 602-91001-006

DRAFTRACK 350

"OCL"	"ICL"	"D"	"d"	"C"	"T"	"B"	OCL/D	ICL/d
1.5" Max	.990" Max	.160" Min	.100" Min	.130" Min	.030" Min	.100" Min	9.4 Max	9.9 Max

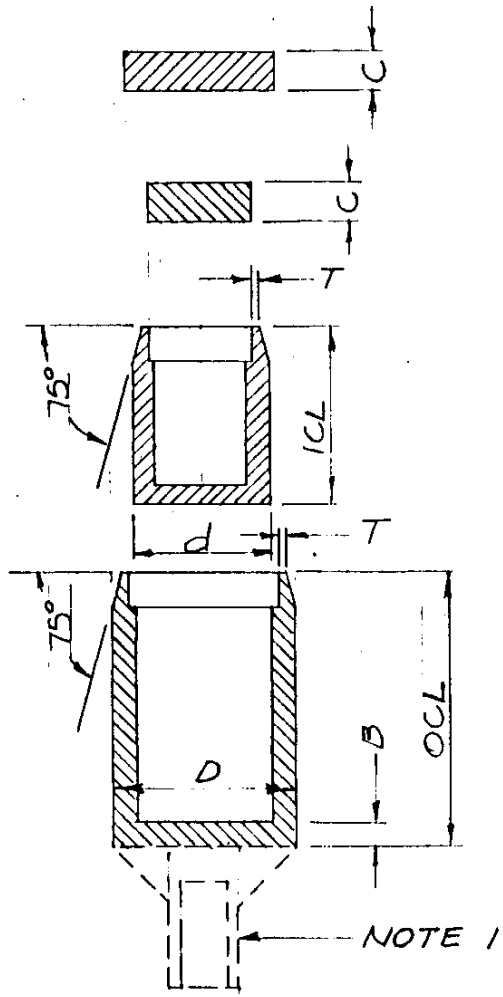

Note 1: Attachments to this capsule may be made by swedging or threading the outlined appendage. Such attachments shall not impair or reduce the structural soundness of the encapsulation. Examples of applications are; Radiography source assemblies, Survey instrument calibrators, et. al.

GAMMA INDUSTRIES; BR, LA.

SCALE: NONE	APPROVED BY:	DRAWN BY HAL
DATE: 6-23-70		REVISED

DOUBLE ENCAPSULATED UNIVERSAL SOURCE

^{192}Ir (5000 Ci), ^{60}Co (2000 Ci)	DRAWING NUMBER 602-7001-007

DRAFTRACE 250

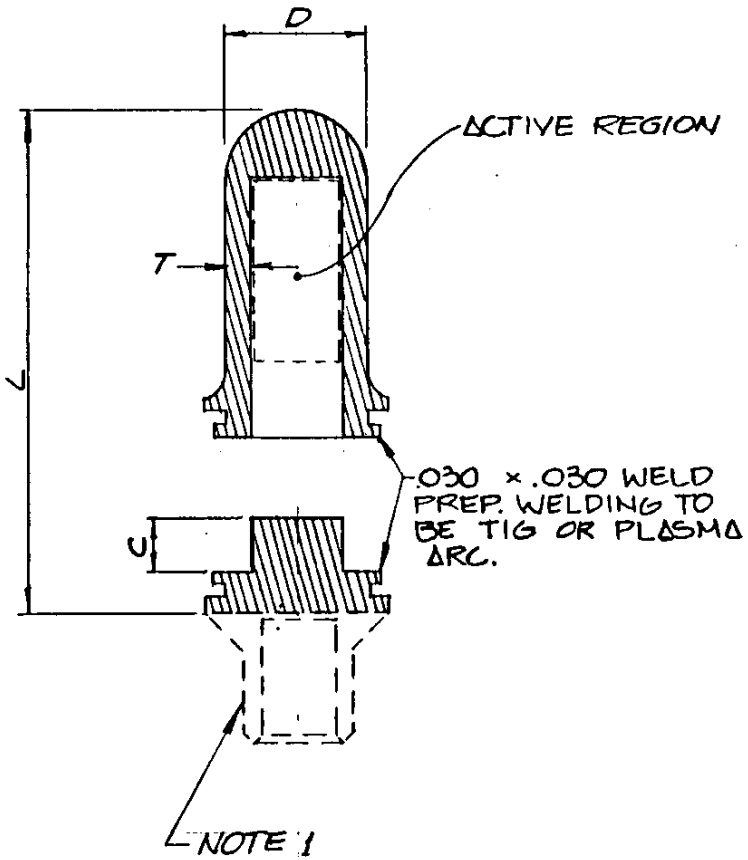

"L"	"D"	"C"	"T"
1.000 Max	.187 Min	.100 Min	.030 Min

Note 1: Attachments to this capsule may be made by swedging or threading the outlined appendage. Such attachments shall not impair or reduce the structural soundness of the encapsulation. Examples of applications are; Radiography source assemblies, Survey instrument calibrators, et. al.

GAMMA INDUSTRIES; BR, LA.

SCALE: NONE	APPROVED BY:	DRAWN BY HAL
DATE: 7-9-79		REVISED

SINGLE ENCAPSULATION, SIDE WELD

^{192}Ir (500 Ci), ^{60}Co (20 Ci)

DRAWING NUMBER 602-7001-008

DRAFTRACE 250