U.S. Department of Transportation
Research and Special Programs Administration

IAEA CERTIFICATE OF COMPETENT AUTHORITY
SPECIAL FORM RADIOACTIVE MATERIAL
CERTIFICATE NUMBER USA/0356/S, REVISION 8

400 Seventh Street, S.W.
Washington, D.C. 20590

This certifies that the sources described below have demonstrated their ability to meet the regulatory requirements for special form radioactive material as prescribed in the regulations of the International Atomic Energy Agency[1] and United States of America[2] for the transport of radioactive materials.

1. Source Identification - Isotope Products Laboratories (IPL) Model Nos. A3000, A3015, A3023, A3024, A3030.

2. Source Description - The sources are fusion welded, double encapsulations constructed of Type 304 or 304L stainless steel except for Model A3030 which is constructed of Type 316 stainless steel. Model A3000 measures 15.9 mm (0.625") in length x 6.4 mm (0.250") in diameter. Model A3015 measures 8.0 mm (0.315") in length x 6 mm (0.236") in diameter. Model A3023 measures 12 mm (0.473") in length x 6 mm (0.236") in diameter with one end having an internal 3-48 thread. Model A3024 measures 10 mm (0.394") in length x 6 mm (0.236") in diameter. Model A3030 measures 19.1 mm (0.75") in length x 12.7 mm (0.5") in diameter. Construction must be in accordance with IPL Drawing Nos. 3000, 3015, 3023, 3024, and 3030 (attached).

3. Radioactive Contents - The sources described by this certificate are authorized to contain any one of the following radionuclides in the chemical form identified and limited to the activity shown.

Radionuclide	Form	Activity GBq (Ci)
Na-22	NaCl in gold or ceramic	3.7 (0.10)
Co-57	CoO in ceramic or Co metal plated on Ni foil	11.1 (0.30)
Co-58	CoO in ceramic	11.1 (0.30)
Co-60	CoO in ceramic or 1 mm x 1 mm Ni clad Co	11.1 (0.30)
Ge-68	GeO_2 in silver	1.9 (0.05)
Cs-137	CsCl in gold or Cs in ceramic	11.1 (0.30)
Ba-133	$BaSO_4$ in ceramic	3.7 (0.10)
Ra-226	$RaSO_4$ in gold or ceramic	1.9 (0.05)
Cf-252	Oxide in metal or ceramic	0.037 (0.001)
Actinides*	Oxides in gold or ceramic	1.9 (0.05)

*(Isotopes of Ac, Th, Pa, Np, U, Pu, Am, and Cm)

---

[1] "Safety Series No. 6, Regulations for the Safe Transport of Radioactive Materials, 1985 Edition, As Amended 1990," published by the International Atomic Energy Agency (IAEA), Vienna, Austria.

[2] Title 49, Code of Federal Regulations, Parts 100 - 199, United States of America.

CERTIFICATE USA/0356/S, REVISION 8

4. Quality Assurance - records of quality assurance activities required by Paragraph 209 of the IAEA regulations[1] shall be maintained and made available to authorized officials for at least three years after the last shipment authorized by this certificate. Consignors and consignees in the United States exporting or importing shipments under this certificate shall satisfy the requirements of Subpart H of 10 CFR 71.

5. Expiration Date - This certificate expires on August 1, 2004.

This certificate is issued in accordance with paragraph 703 of the IAEA Regulations and Section 173.476 of Title 49 of the Code of Federal Regulations, in response to the petition and information dated May 20, 1999 and July 13, 1999 submitted by Isotope Products Laboratories, Burbank, CA and in consideration of other information on file in this Office.

Certified by:

Alan I. Roberts
for Associate Administrator for Hazardous Materials Safety

JUL 16 1999
(DATE)

Revision 8 - Issued to delete two source model numbers, to incorporate revised drawings and to extend the expiration date.

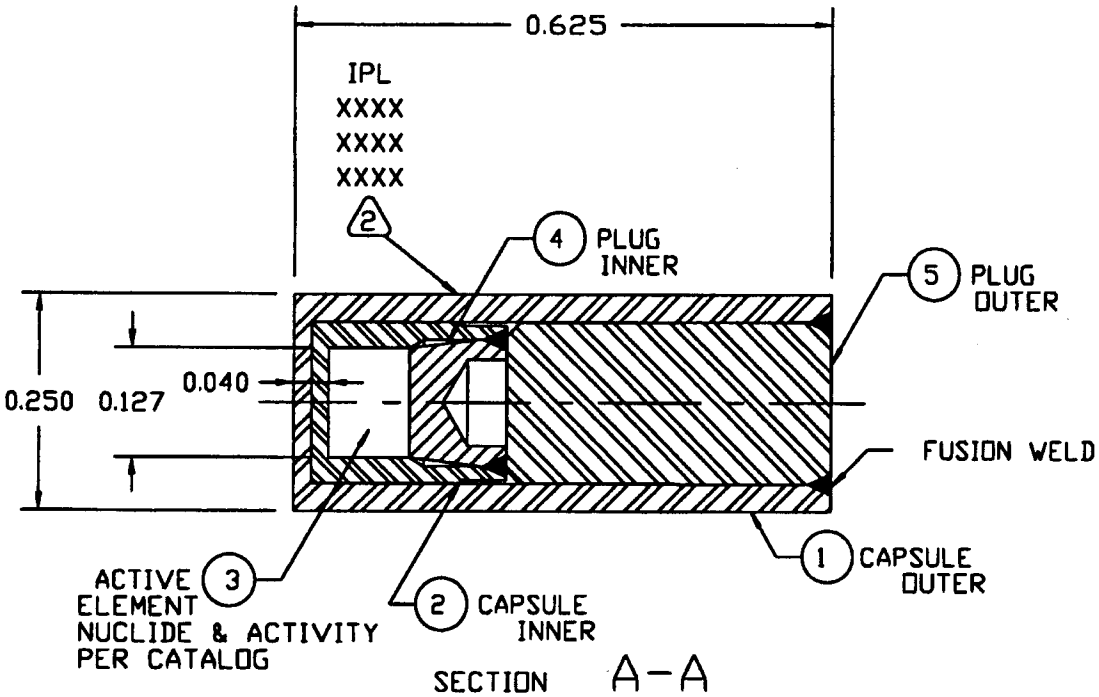

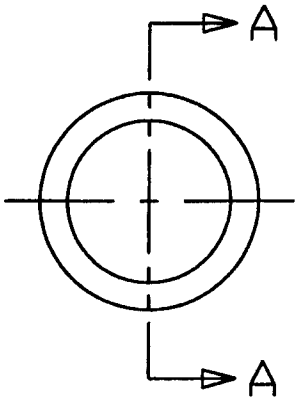

3. INDIVIDUALLY PACKAGE AND IDENTIFY PART NUMBER THEREON

2 ENGRAVE CHARACTERS 0.060 HIGH x 0.003 DEEP MAX
AS SHOWN: (BLACK FILL)
IPL
NUCLIDE
ACTIVITY
SOURCE NUMBER

---

1. ASSEMBLE COMPLETE PER ENGINEERING DRAWING
AND FUSION WELD AS REQUIRED

NOTE: UNLESS OTHERWISE SPECIFIED

P/N: A3000 ASSEMBLY, MODEL 225 POINT SOURCE

ISOTOPE PRODUCTS LABORATORIES
BURBANK, CALIFORNIA 91504

THIS DRAWING IS THE PROPERTY OF ISOTOPE PRODUCTS LABORATORIES AND MAY NOT BE USED, REPRODUCED, PUBLISHED OR DISCLOSED TO OTHERS WITHOUT EXPRESS AUTHORIZATION BY ISOTOPE PRODUCTS LABORATORIES.

UNLESS OTHERWISE SPECIFIED DIMENSIONS ARE IN INCHES

FRACTION	TOLERANCES ON DECIMAL X	XX	XXX	ANGLE
±1/64	± .1	.01	.002	±.5°

THIRD ANGLE PROJECTION

DESIGN	DRAWING TITLE
JMD/RLT	MODEL 225 POINT SOURCE
SCALE NONE	SERIES TITLE HIGH INTENSITY GAMMA AND NEUTRON SOURCES

SIZE	CAGE CODE	REVISION	DRAWING NUMBER	SHEET
A	32993	F	3000	3 OF 9

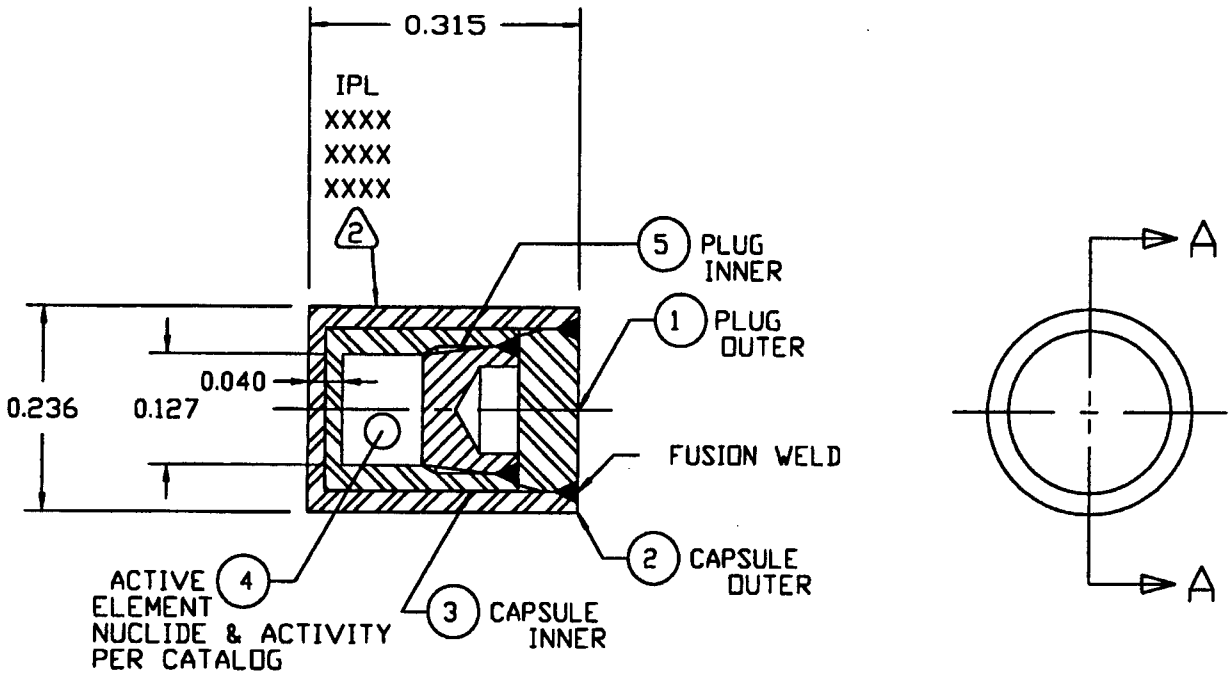

SECTION A-A

3. INDIVIDUALLY PACKAGE AND IDENTIFY PART NUMBER THEREON

2 ENGRAVE CHARACTERS 0.060 HIGH x 0.003 DEEP MAX
AS SHOWN: (BLACK FILL)
IPL
NUCLIDE
ACTIVITY
SOURCE NUMBER

---

1. ASSEMBLE COMPLETE PER ENGINEERING DRAWING
AND FUSION WELD AS REQUIRED

NOTE: UNLESS OTHERWISE SPECIFIED

P/N: A3015

ASSEMBLY, SERIES 225
3015 CAPSULE

ISOTOPE PRODUCTS LABORATORIES
BURBANK, CALIFORNIA 91504

THIS DRAWING IS THE PROPERTY OF ISOTOPE PRODUCTS LABORATORIES AND MAY NOT BE USED, REPRODUCED, PUBLISHED OR DISCLOSED TO OTHERS WITHOUT EXPRESS AUTHORIZATION BY ISOTOPE PRODUCTS LABORATORIES.

UNLESS OTHERWISE SPECIFIED DIMENSIONS ARE IN INCHES

TOLERANCES ON				
FRACTION	DECIMAL X	DECIMAL XX	DECIMAL XXX	ANGLE
±1/64	± .1	.01	.002	±5°

THIRD ANGLE PROJECTION

DESIGN	DRAWING TITLE
JMD/RLT	3015 CAPSULE, 225 SERIES
SCALE: NONE	SERIES TITLE: HIGH INTENSITY GAMMA AND NEUTRON SOURCES

SIZE	CAGE CODE	REVISION	DRAWING NUMBER	SHEET
A	32993	A	3015	3 OF 4

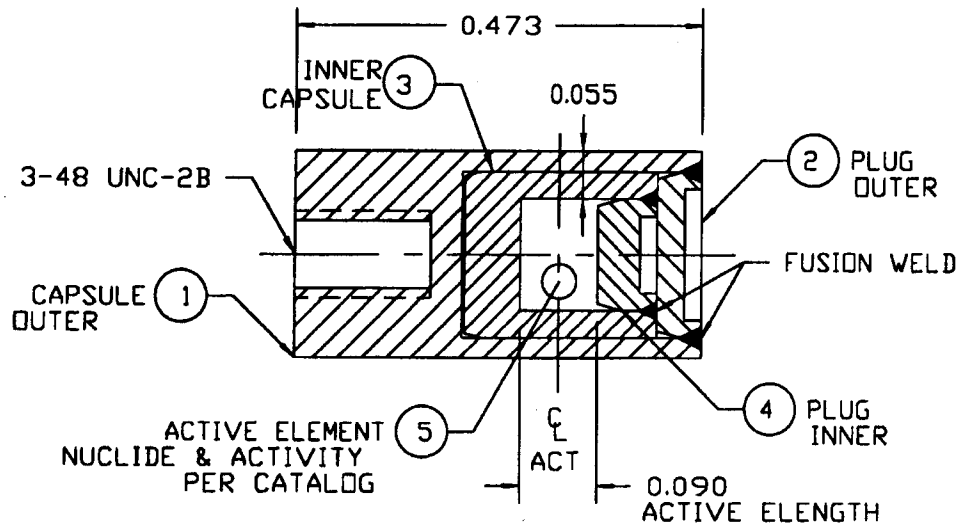

SECTION A-A

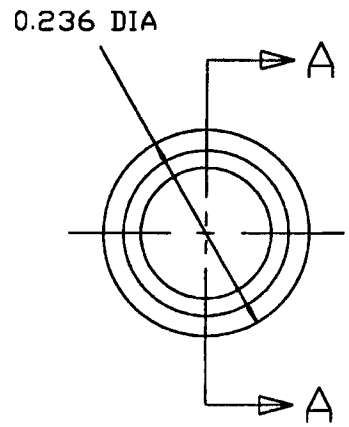

2. IDENTIFY PART NUMBER
1. ASSEMBLE COMPLETE PER ENGINEERING DRAWING AND FUSION WELD AS REQUIRED

NOTE: UNLESS OTHERWISE SPECIFIED

P/N: A3023 ASSEMBLY

ISOTOPE PRODUCTS LABORATORIES
BURBANK, CALIFORNIA 91504

THIS DRAWING IS THE PROPERTY OF ISOTOPE PRODUCTS LABORATORIES AND MAY NOT BE USED, REPRODUCED, PUBLISHED OR DISCLOSED TO OTHERS WITHOUT EXPRESS AUTHORIZATION BY ISOTOPE PRODUCTS LABORATORIES.

UNLESS OTHERWISE SPECIFIED DIMENSIONS ARE IN INCHES

TOLERANCES ON				
FRACTION	DECIMAL X	DECIMAL XX	DECIMAL XXX	ANGLE
±1/64	± .1	.01	.002	±.5°

THIRD ANGLE PROJECTION

DESIGN	DRAWING TITLE
JMD/RLT	GAMMA MATRICS
SCALE NONE	SERIES TITLE HIGH INTENSITY GAMMA AND NEUTRON SOURCES

SIZE	CAGE CODE	REVISION	DRAWING NUMBER	SHEET
A	32993	A	3023	3 OF 7

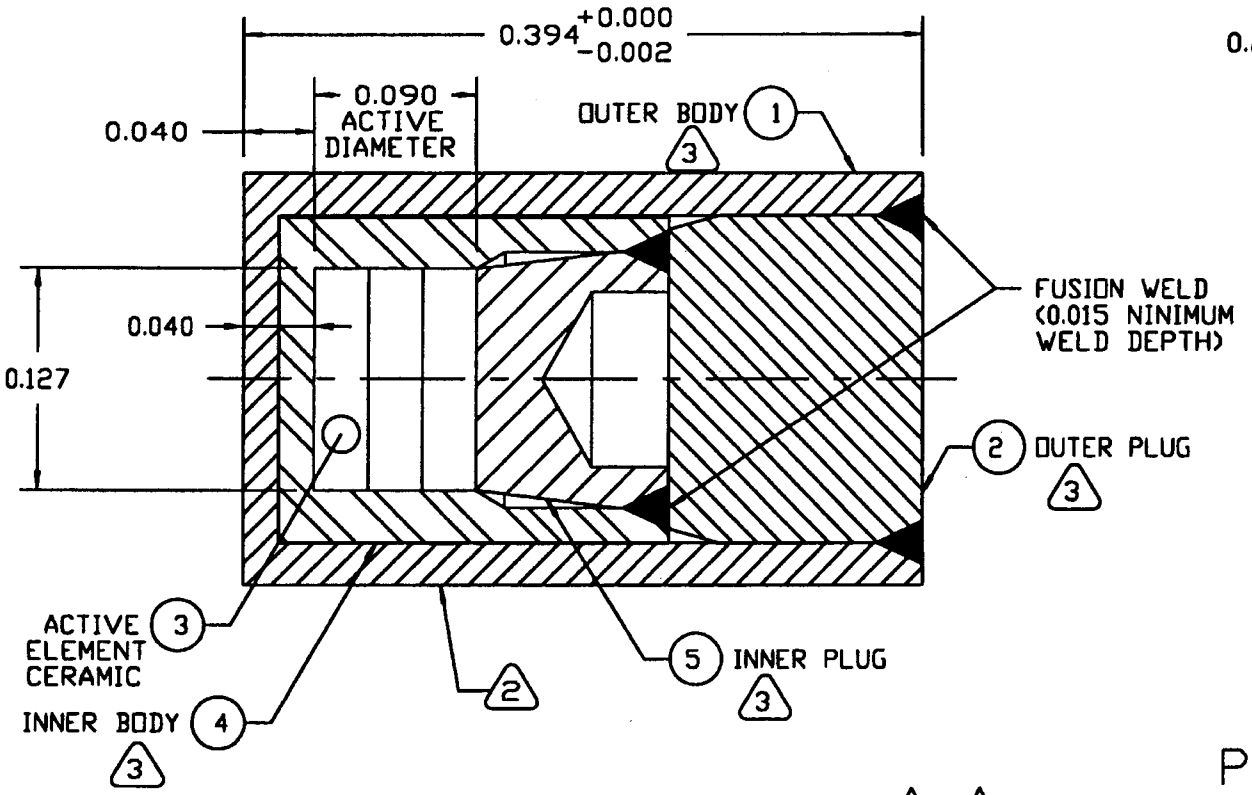

SECTION A−A

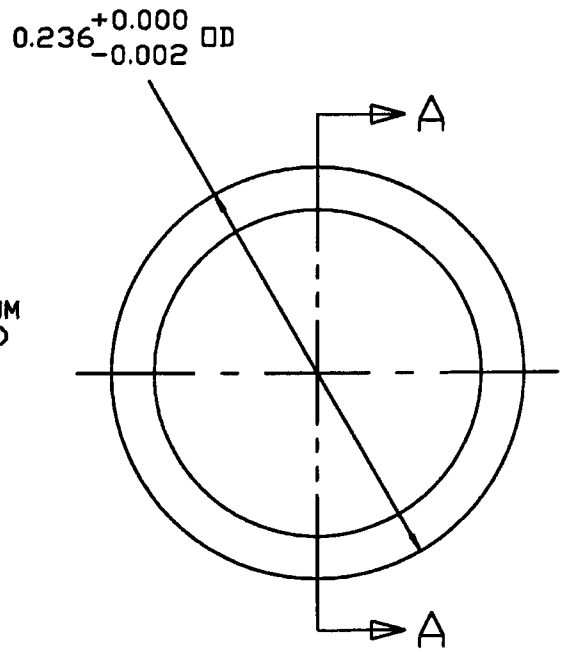

P/N: A3024 ASSEMBLY

3 304 or 304L STAINLESS STEEL

2 SEE SHEET 4 FOR ENGRAVING INSTRUCTIONS

1. ASSEMBLE COMPLETE PER ENGINEERING DRAWING AND FUSION WELD AS REQUIRED

NOTE: UNLESS OTHERWISE SPECIFIED

4. IDENTIFY PART NUMBER

NOTE: UNLESS OTHERWISE SPECIFIED

ISOTOPE PRODUCTS LABORATORIES
BURBANK, CALIFORNIA 91504

THIS DRAWING IS THE PROPERTY OF ISOTOPE PRODUCTS LABORATORIES AND MAY NOT BE USED, REPRODUCED, PUBLISHED OR DISCLOSED TO OTHERS WITHOUT EXPRESS AUTHORIZATION BY ISOTOPE PRODUCTS LABORATORIES.

UNLESS OTHERWISE SPECIFIED DIMENSIONS ARE IN INCHES

TOLERANCES ON				
FRACTION	DECIMAL X	DECIMAL XX	DECIMAL XXX	ANGLE
±1/64	± .1	.01	.002	±5°

THIRD ANGLE PROJECTION

DESIGN	DRAWING TITLE
JMD/RLT	HEG SOURCE, 1cm LENGTH
SCALE	SERIES TITLE
NONE	HIGH INTENSITY GAMMA AND NEUTRON SOURCE

SIZE	CAGE CODE	REVISION	DRAWING NUMBER	SHEET
A	32993	B	3024	3 OF 6

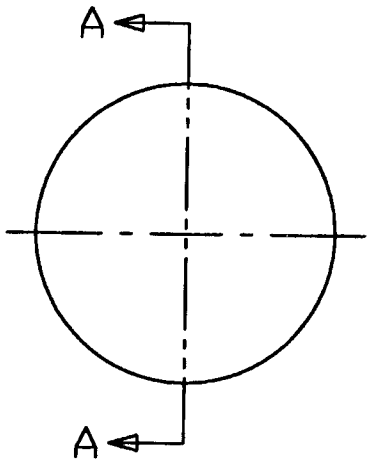

P/N: A3030 ASSEMBLY

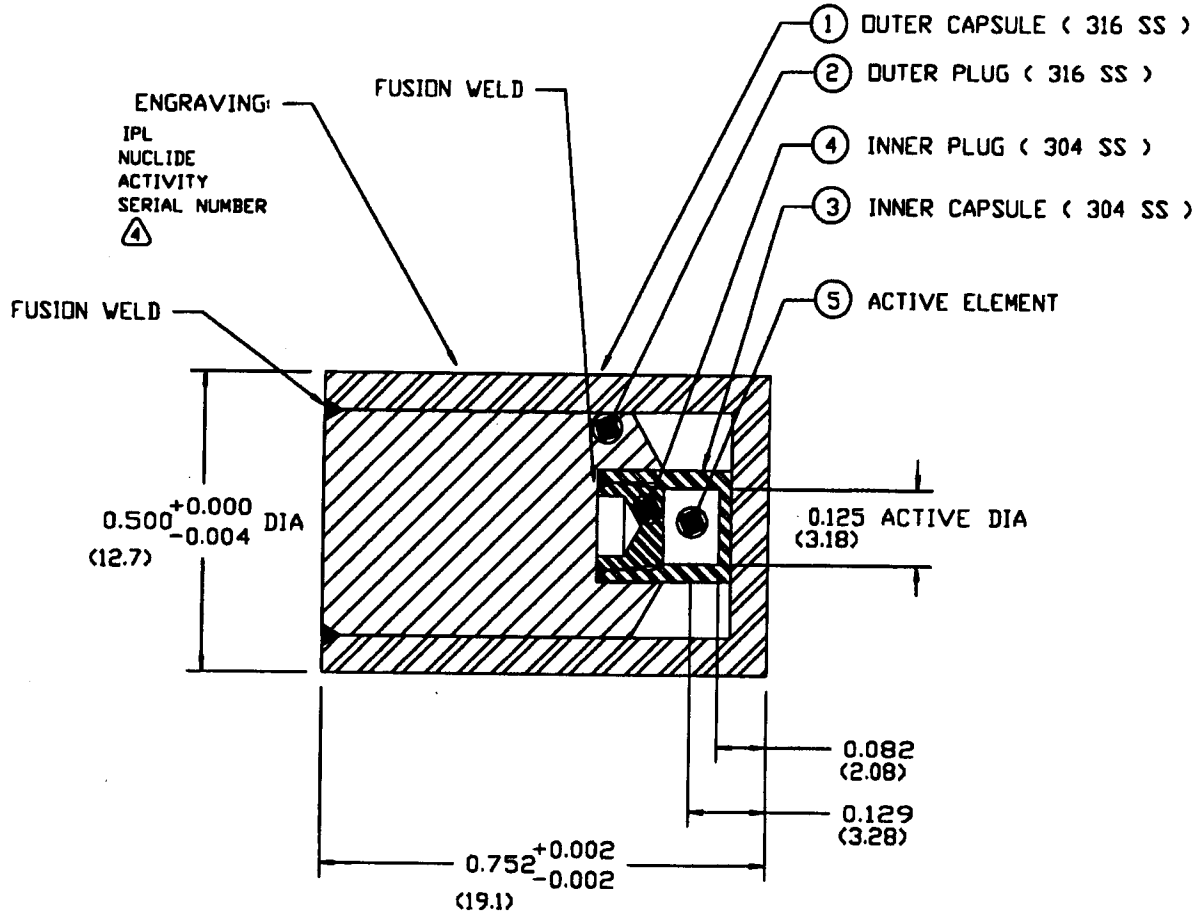

SECTION A-A

5. INDIVIDUALLY PACKAGE AND IDENTIFY PART NUMBER THEREON

4 ENGRAVE CHARACTERS 0.060 HIGH x 0.003 DEEP MAX
AS SHOWN: (BLACK FILL)
IPL
NUCLIDE
ACTIVITY
SERIAL NUMBER

---

4. TOLERANCES:

INCH:	0.XXX	±.002,	0.XX	0.01,	±0.X	0.1,	ANGLE	0.5 ± °
mm:	0.XXX	±.050,	0.XX	0.25,	±0.X	2.5,	ANGLE	0.5 ± °

3. DIMENSIONS ARE IN INCHES
2. ( ) DIMENSIONS ARE IN MILLIMETERS
1. ASSEMBLE COMPLETE PER ENGINEERING DRAWING AND FUSION WELD AS REQUIRED

NOTE: UNLESS OTHERWISE SPECIFIED

THIS DRAWING IS THE PROPERTY OF ISOTOPE PRODUCTS LABORATORIES, AND MAY NOT BE USED, REPRODUCED, PUBLISHED OR DISCLOSED TO OTHERS WITHOUT EXPRESS AUTHORIZATION BY ISOTOPE PRODUCTS LABORATORIES.

ISOTOPE PRODUCTS LABORATORIES
BURBANK, CALIFORNIA 91504

SCALE: NTS	APPROVED:	DESIGNED: JMD/RLT
DATE: 06/05/95		REV/CHG: -
TITLE: WIDE FIELD GAMMA GAUGE SOURCE		SHEET: 3 OF 5
SERIES: HIGH INTENSITY GAMMA & NEUTRON SOURCES (HEG SERIES CAPSULES 193, 225 & N-252)		DRAWING NUMBER 3030