U.S. Department of Transportation

Research and Special Programs Administration

400 Seventh Street, S.W.
Washington, D.C. 20590

IAEA CERTIFICATE OF COMPETENT AUTHORITY
SPECIAL FORM RADIOACTIVE MATERIALS
CERTIFICATE NUMBER USA/0357/S, REVISION 7

This certifies that the sources described below have demonstrated their ability to meet the regulatory requirements for special form radioactive material as prescribed in the regulations of the International Atomic Energy Agency[1] and the United States of America[2] for the transport of radioactive materials.

1. Source Identification - Isotope Products Laboratories (IPL) source capsules Models A3203 and A3214.

2. Source Description - Each source described by this certificate is a welded, single encapsulation constructed of Type 304 or 304L stainless steel, with a 0.05 mm (0.002 in) thick fusion welded window at one end. Source capsule measures 7.9 mm (0.312 in) in diameter by 5.1 mm (0.2 in) in length. Source capsule shall be constructed in accordance with one of the attached IPL drawing nos. A3203 or A3214.

3. Radioactive Contents - Each source described by this certificate is authorized to contain any one of the following radionuclides in the chemical form identified and limited to the activity shown.

Radionuclide	Form	Activity
Na-22	NaCl in gold or ceramic	185 MBq (5 mCi)
Co-57	Co metal plated on Ni foil or CoO in ceramic	11,100 MBq (300 mCi)
Co-58	Co metal plated on Ni foil or CoO in ceramic	11,100 MBq (300 mCi)
Co-60	Co metal plated on Ni foil or CoO in ceramic	370 MBq (10 mCi)
Ge-68	GeO_2 in silver	1850 MBq (50 mCi)
Sr-90	$SrTiO_4$ in Ag or SrO_2 in ceramic	4625 MBq (125 mCi)
Ru-106	Ru metal plated on Pt	1850 MBq (50 mCi)
Cs-137	CsCl in gold or Cs in ceramic	11,100 MBq (300 mCi)
Ba-133	$BaSO_4$ in ceramic or $BaCl_2$ in ceramic	3700 MBq (100 mCi)
Lanthanides*	Oxides plated on Pt, in ceramic, or in aluminum	11,100 MBq (300 mCi)
Actinides**	Oxides in ceramic or aluminum	1110 MBq (30 mCi)

*(Isotopes of Ce, Pr, Sm, Eu, Yb, and Tm only)
**(Isotopes of Ac, Th, Pa, U, Pu, Am, and Cm only)

---

[1] "Safety Series No. 6, Regulations for the Safe Transport of Radioactive Material, 1985 Edition (As Amended 1990)," published by the International Atomic Energy Agency (IAEA), Vienna, Austria.

[2] Title 49, Code of Federal Regulations, Parts 100 - 199, United States of America.

CERTIFICATE USA/0357/S, Revision 7

4. Quality Assurance - Records of Quality Assurance activities required by Paragraph 209 of the IAEA regulations[1] shall be maintained and made available to the authorized officials for at least three years after the last shipment authorized by this certificate. Consignors and consignees in the United States exporting or importing shipments under this certificate shall satisfy the requirements of Subpart H of 10 CFR 71.

5. Expiration Date - This certificate expires April 1, 2006.

This certificate is issued in accordance with paragraph 703 of the IAEA Regulations and Section 173.476 of Title 49 of the Code of Federal Regulations, in response to the petition and information dated March 16, 2001 submitted by sotope Products Laboratories, Burbank, CA, and in consideration of other information on file in this Office.

Certified by:

Robert A. McGuire
Associate Administrator for
Hazardous Materials Safety

MAY 17 2001
(DATE)

Revision 7 - Issued to extend the expiration date.

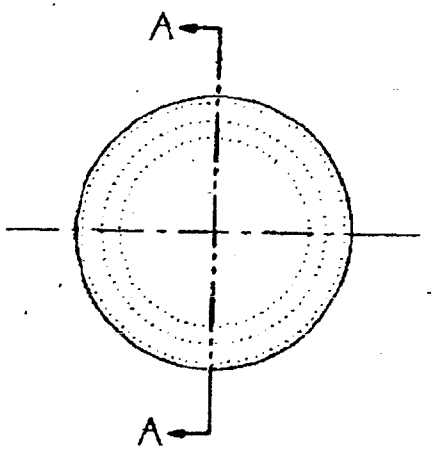

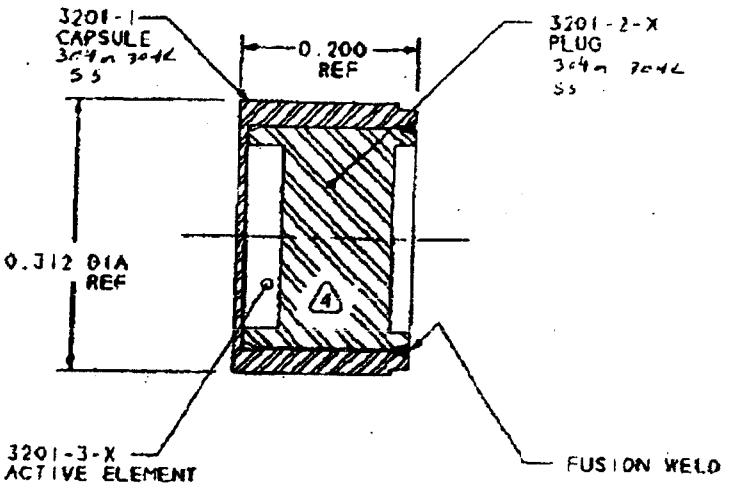

P/N: A3201-X CAPSULE ASSEMBLY

SECTION A-A

X	ACTIVE ELEMENT SIZE
0	0.000" DIA x 0.000" NO HOLE
1	0.125" DIA x 0.030"
2	0.187" DIA x 0.020"
3	0.210" DIA x 0.040"
4	0.250" DIA x 0.040"

5. PACKAGE AND IDENTIFY PART NUMBER THEREON
4. ENGRAVE CHARACTERS .060 HIGH x .003 DEEP MAX CENTERED ON CIRCUMFERENCE OF 3201-1:
   IPL
   ISOTOPE
   ACTIVITY
   SERIAL NUMBER
3. TOLERANCES: 0.XXX ±0.002 0.XX ±0.01 0.X ±0.1
   ANGLE ±0.5°
2. DIMENSIONS ARE IN INCHES
1. ASSEMBLE COMPLETE PER ENGINEERING DRAWING AND FUSION WELD AS REQUIRED

NOTE: UNLESS OTHERWISE SPECIFIED

THIS DRAWING IS THE PROPERTY OF ISOTOPE PRODUCTS LABORATORIES, AND MAY NOT BE USED, REPRODUCED, [illegible]

ISOTOPE PRODUCTS LABORATORIES
BURBANK, CALIFORNIA 91504

SCALE: NTS	APPROVED: Michael Devine 2/2/94	DESIGNED: JMD/RLT
DATE: 01/25/94		REV/CHG: B
TITLE: MODEL 3201 PHOTON SOURCE		SHEET: 3 OF 16
SERIES: XFB & GFS SERIES 3200 CAPSULES		DRAWING NUMBER 3201

202 366 3753 P.04/06

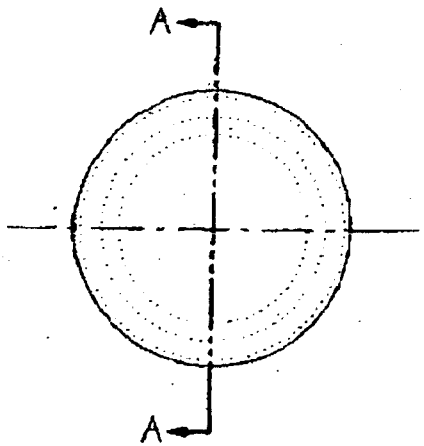

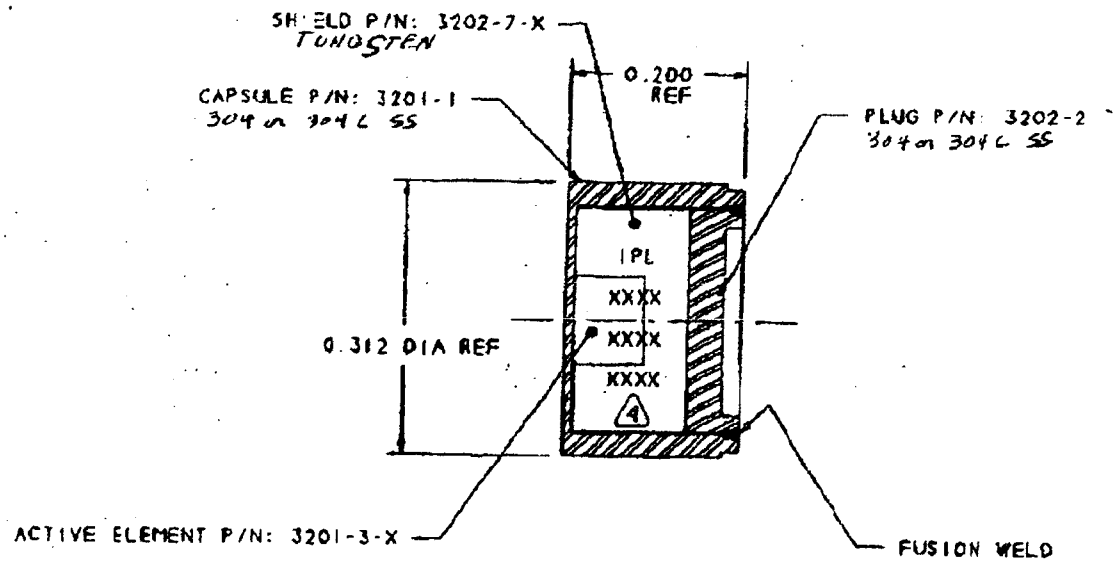

P/N: A3202-X ASSEMBLY

SECTION A-A

X	ACTIVE ELEMENT SIZE
0	0.000" DIA x 0.000". NO HOLE
1	0.125" DIA x 0.030"
2	0.187" DIA x 0.020"
3	0.210" DIA x 0.040"
4	0.250" DIA x 0.040"

5. PACKAGE AND IDENTIFY PART NUMBER THEREON
4. ENGRAVE CHARACTERS 0.060 HIGH x 0.003 DEEP MAX CENTERED ON CIRCUMFERENCE OF 3201-1:
   IPL
   ISOTOPE
   ACTIVITY
   SERIAL NUMBER

3. TOLERANCES: 0.XXX ±0.002, 0.XX ±0.01, 0.X ±0.1, ANGLE ±0.5°.
2. DIMENSIONS ARE IN INCHES
1. ASSEMBLE COMPLETE PER ENGINEERING DRAWING

NOTE: UNLESS OTHERWISE SPECIFIED

THIS DRAWING IS THE PROPERTY OF ISOTOPE PRODUCTS LABORATORIES, AND MAY NOT BE USED, REPRODUCED, PUBLISHED OR DISCLOSED TO OTHERS WITHOUT EXPRESS AUTHORIZATION BY ISOTOPE PRODUCTS LABORATORIES.

ISOTOPE PRODUCTS LABORATORIES
BURBANK, CALIFORNIA 91504

SCALE: NTS	APPROVED: Michael Devine	DESIGNED: JMD/RLT
DATE: 01/27/94		REV/CHG: C
TITLE: 3202 CAPSULE		SHEET: 3 OF 5
SERIES: GFS AND XFB SERIES		DRAWING NUMBER 3202

202 366 3753 P.05/06

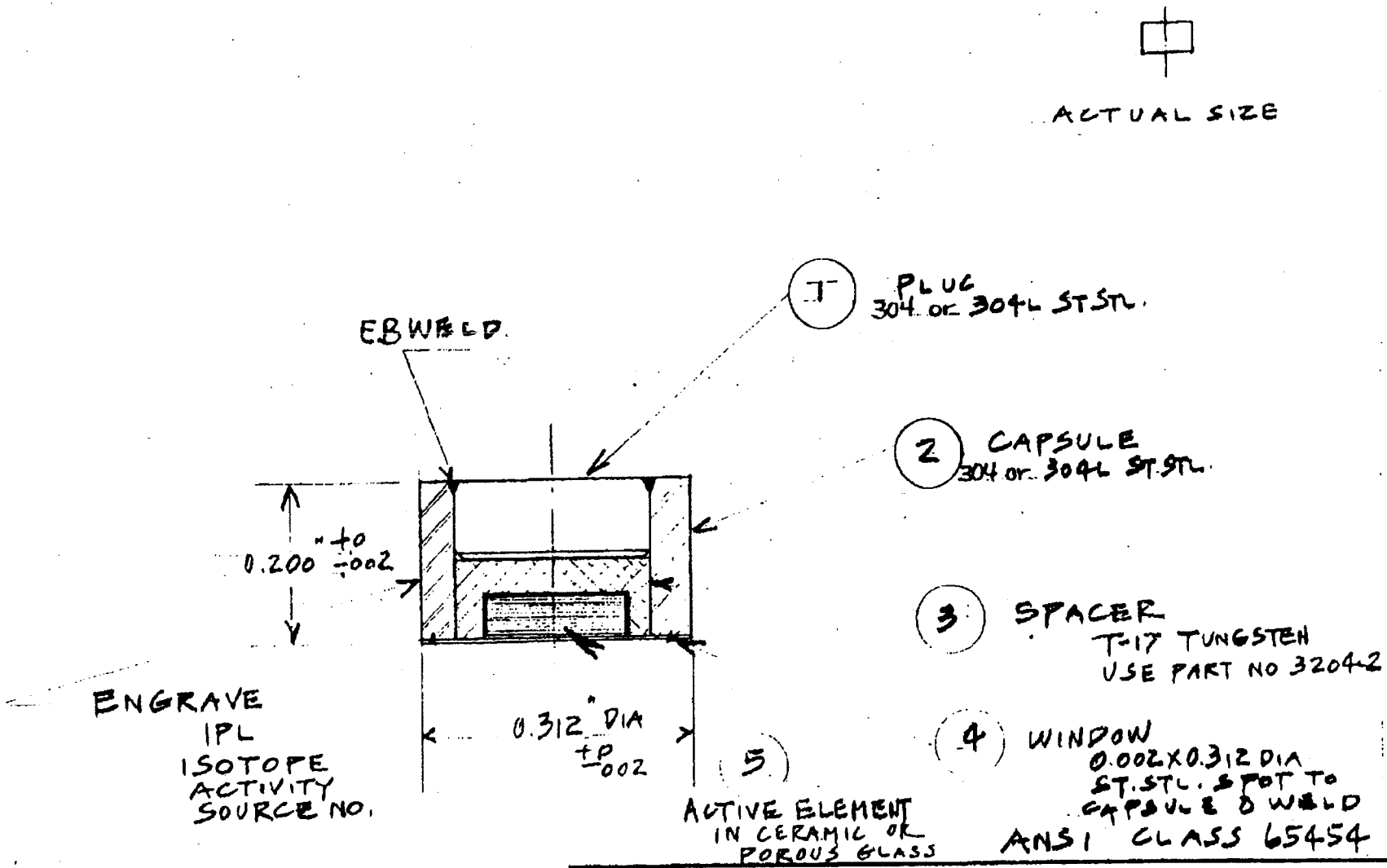

GROUP #1

ERW 2-26-87
3/3/87
3-3-87

ISOTOPE PRODUCTS LABORATORIES
BURBANK, CALIFORNIA 91504

SCALE: 5 TO 1	APPROVED BY:	DRAWN BY: E.W.
DATE: 2-26-87		REVISED A 9/15/88

LOW ENERGY X RAY SOURCE
GFS-3

GFS AND XFB SOURCES

DRAWING NUMBER A3214

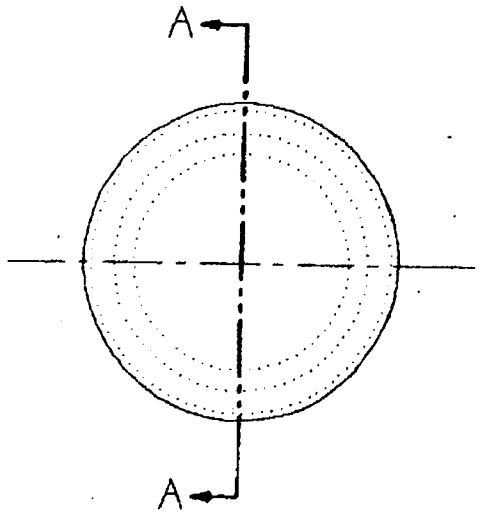

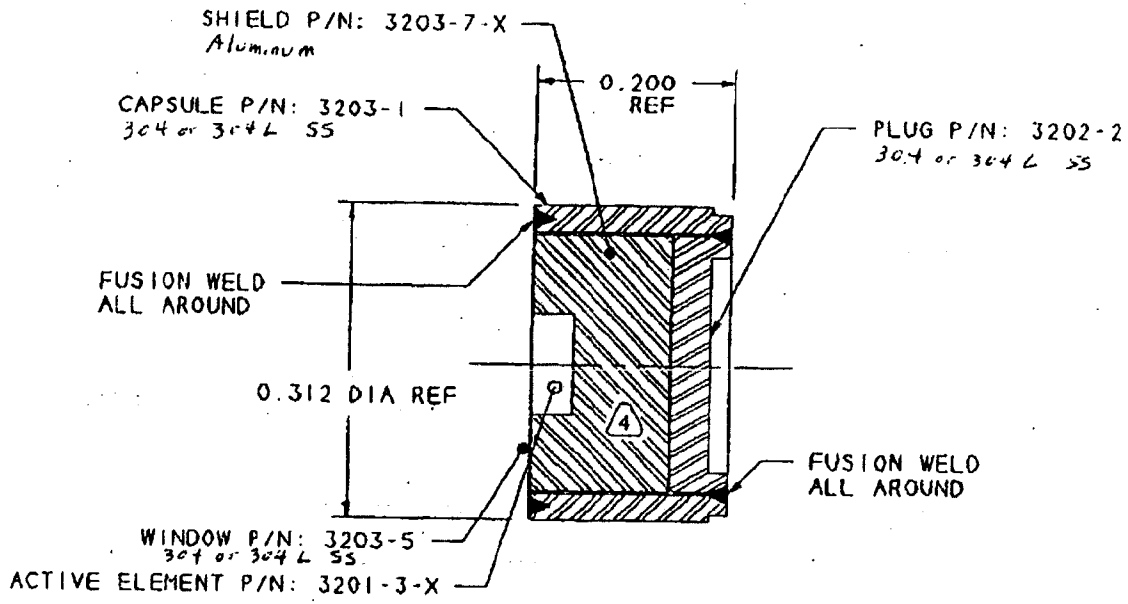

P/N: A3203-X ASSEMBLY

SECTION A-A

GROUP #1

X	ACTIVE ELEMENT SIZE
0	0.000" DIA x 0.000", NO HOLE
1	0.125" DIA x 0.030"
2	0.187" DIA x 0.020"
3	0.210" DIA x 0.040"
4	0.250" DIA x 0.040"

5. PACKAGE AND IDENTIFY PART NUMBER THEREON
4. ENGRAVE CHARACTERS 0.060 HIGH x 0.003 DEEP MAX CENTERED ON CIRCUMFERENCE OF 3203-1:
   IPL
   ISOTOPE
   ACTIVITY
   SERIAL NUMBER

---

3. TOLERANCES: 0.XXX ±0.002. 0.XX ±0.01. 0.X ±0.1. ANGLE ±0.5°.
2. DIMENSIONS ARE IN INCHES
1. ASSEMBLE COMPLETE PER ENGINEERING DRAWING

NOTE: UNLESS OTHERWISE SPECIFIED

THIS DRAWING IS THE PROPERTY OF ISOTOPE PRODUCTS LABORATORIES

ISOTOPE PRODUCTS LABORATORIES
BURBANK, CALIFORNIA 91504

SCALE: NTS	APPROVED: Michael Devine 2/2/94	DESIGNED: JMD/RLT
DATE: 01/15/94		REV/CHG: C
TITLE: 3202 CAPSULE		SHEET: 3 OF 6
SERIES: GES AND XES SERIES		DRAWING NUMBER