U.S. Department
of Transportation
**Research and
Special Programs
Administration**

400 Seventh St., S.W.
Washington, D.C. 20590

**IAEA CERTIFICATE OF COMPETENT AUTHORITY
SPECIAL FORM RADIOACTIVE MATERIALS
CERTIFICATE NUMBER USA/0367/S, REVISION 5**

This certifies that the sources described have been demonstrated to meet the regulatory requirements for special form radioactive material as prescribed in the regulations of the International Atomic Energy Agency[1] and the United States of America[2] for the transport of radioactive materials.

1. Source Identification - Frontier Technology Corporation Model 10 Series and Model 100 Series.

2. Source Description - The Model 10 series source capsules are single encapsulations which measure 5.5 mm (0.217") in diameter and either 12 mm (0.47") or 25 mm (1.0") in length. The Model 100 source capsules are double encapsulations where the inner capsule is a Model 10 series source and the outer capsule measures 9.4 mm (0.37") in diameter and either 25 mm (1.0") or 38 mm (1.5") in length. Both series of source capsules are made of 304L stainless steel or zircalloy. Sources shall be manufactured in accordance with the attached drawings.

3. Radioactive Contents - The sources contain no more than 0.2 TBq (5.4 Ci) of Californium 252 in the form of Cf-Pd cermet or Cf-Pd alloy.

4. Quality Assurance - Records of Quality Assurance activities required by Paragraph 209 of the IAEA regulations[1] shall be maintained and made available to the authorized officials for at least three years after the last shipment authorized by this certificate. Consignors and consignees in the United States exporting or importing shipments under this certificate shall satisfy the requirements of Subpart H of 10 CFR 71.

5. Expiration Date - This certificate expires October 1, 2005.

---

1 "Safety Series No. 6, Regulations for the Safe Transport of Radioactive Materials, 1985 Edition, as amended 1990" , published by the International Atomic Energy Agency (IAEA), Vienna, Austria.

2 Title 49, Code of Federal Regulations, Parts 100 - 199, United States of America.

CERTIFICATE USA/0367/S, REVISION 5

This certificate is issued in accordance with paragraph 703 of the IAEA Regulations and Section 173.476 of Title 49 of the Code of Federal Regulations, in response to the petition and information dated August 17, 2000 submitted by Frontier Technology Corporation, Xenia, OH, and in consideration of other information on file in this Office.

Certified by:

Robert A. McGuire
Associate Administrator for
Hazardous Materials Safety

SEP 27 2000
(DATE)

Revision 5 - Issued to approve sources against the 1985 IAEA regulations and to extend the expiration date.

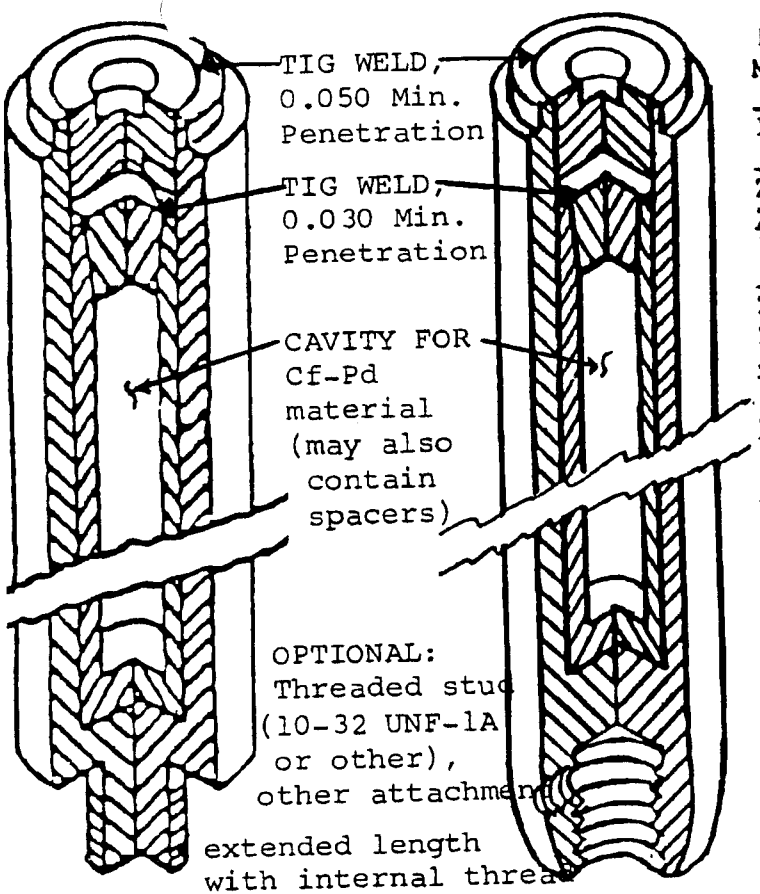

LABELING: Each source is marked on the outside surface with the letters "FTC" to denote the manufacturer, "CF" to denote the contents as Cf-252, and a unique serial number. The letter "Z" preceeds the serial number when either or both capsules are Zircalloy-2.

Material: 304L Stainless Steel or Zircalloy-2

Model	Inner Capsule Material/Dwg	Outer Capsule Material/Dwg	Threaded Stud	Assembly Dwg	Cf limit
100 & 100R	304L/ A10010-AA00	304L/ A10100-PA01	yes	A10100-AA00	10 mg
Z100 & Z100R	Zirc-2/ A10010-ZA00	Zirc-2/ A10100-PZ01	yes	A10100-ZA00	10 mg
100S & 100SR	304L/ A10010-AA01	304L/ A10100-PA02	yes	A10100-AB00	4 mg
Z100S & Z100SR	Zirc-2/ A10010-ZA01	Zirc-2/ A10100-PZ02	yes	A10100-ZB00	4
ZS100 & ZS100R	Zirc-2/ A10010-ZA00	304L/ A10100-PA01	yes	A10100-ZA01	10 mg
SZ100 & SZ100R	304L/ A10010-AA00	Zirc-2/ A10100-PZ01	yes	A10100-ZA02	10 mg
ZS100S & ZS100SR	Zirc-2/ A10010-ZA01	304L/ A10100-PA02	yes	A10100-ZB01	4 mg
SZ100S & SZ100SR	304L/ A10010-AA01	Zirc-2/ A10100-PZ02	yes	A10100-ZB02	4 mg
100NS & 100NSR	304L/ A10010-AA00	304L/ A10100-PA03	no	A10100-AC00	10 mg
Z100NS & Z100NSR	Zirc-2/ A10010-ZA00	Zirc-2/ A10100-PZ03	no	A10100-ZC00	10 mg
100SNS & 100SNSR	304L/ A10010-AA01	304L/ A10100-PA04	no	A10100-AD00	4 mg
Z100SNS & Z100SNSR	Zirc-2/ A10010-ZA01	Zirc-2/ A10100-PZ04	no	A10100-ZD00	4 mg
ZS100NS & ZS100NSR	Zirc-2/ A10010-ZA00	304L A10100-PA03	no	A10100-ZC01	10mg
SZ100NS & SZ100NSR	304L/ A10010-AA00	Zirc-2/ A10100-PZ03	no	A10100-ZC02	10 mg
ZS100SNS & ZS100SNSR	Zirc-2/ A10010-ZA01	304L/ A10100-PA04	no	A10100-ZD01	4 mg
SZ100SNS & SZ100SNSR	304L/ A10010-AA01	Zirc-2/ A10100-PZ04	no	A10100-ZD02	4 mg
Any above with "MX" in suffix	As for model designation without "MX"		Special stud or attachment	A10100-MX00	As w/o "MX"
Any above with "ML" in suffix	As for model designation without "ML"		Extended length with or without attachment hole	A10100-ML00	As w/o "ML"

MODEL DESCRIPTION CHART

FTC MODEL 100 SERIES - Standard Neutron Sources

FTC MODEL 10 SERIES - Standard Neutron Source

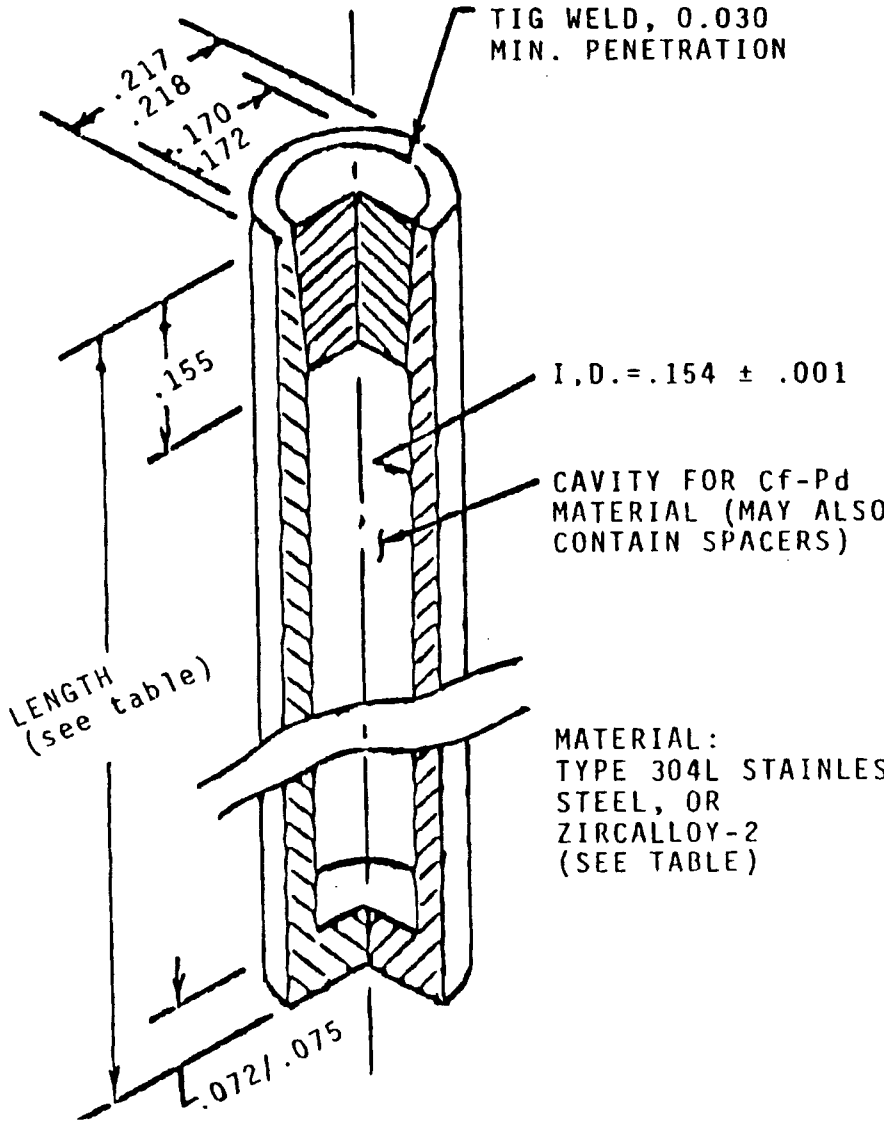

DIMENSIONS IN INCHES
(FOR REFERENCE)

MODEL DESCRIPTION CHART

MODEL	LENGTH(inches)	MATERIAL	Cf LIMIT
10	0.970/0.980	304L Stainless Steel	10 mg.
10S	0.465/0.475	304L Stainless Steel	4 mg.
Z10	0.970/0.980	Zircalloy-2	10 mg.
Z10S	0.465/0.475	Zircalloy-2	4 mg.