U.S. Department
of Transportation
**Research and
Special Programs
Administration**

400 Seventh St., S.W.
Washington, D.C. 20590

**IAEA CERTIFICATE OF COMPETENT AUTHORITY
SPECIAL FORM RADIOACTIVE MATERIALS
CERTIFICATE NUMBER USA/0502/S, REVISION 2**

This certifies that the sources described have been demonstrated to meet the regulatory requirements for special form radioactive material as prescribed in the regulations of the International Atomic Energy Agency[1] and the United States of America[2] for the transport of radioactive materials.

1. Source Identification - AEA Technology Model X540 Capsule Series.

2. Source Description - The sources approved by this certificate are tungsten inert gas welded,single or double encapsulations where the outer capsule is constructed of titanium or stainless steel and the inner capsule, if used, is constructed of stainless steel, aluminium, or titanium. The outer capsule is 5.1 mm (0.20") in diameter and is 7.6 mm (0.30") in length. Sourceh capsules must be manufactured in accordance with AEA Technology drawing no. R87527 (attached).

3. Radioactive Contents - The source contains no more than 17 TBq (459 Ci) of either Co-60 or Ir-192 or no more than 3 TBq (81 Ci) of Selenium-75.

4. Quality Assurance - Records of Quality Assurance activities required by Paragraph 209 of the IAEA regulations[1] shall be maintained and made available to the authorized officials for at least three years after the last shipment authorized by this certificate. Consignors and consignees in the United States exporting or importing shipments under this certificate shall satisfy the requirements of Subpart H of 10 CFR 71.

5. Expiration Date - This certificate expires October 1, 2005. On January 1, 2001, this certificate supersedes, in its entirety, all previously issued revisions of USA/0502/S.

---

1 "Safety Series No. 6, Regulations for the Safe Transport of Radioactive Materials, 1985 Edition, as amended 1990" , published by the International Atomic Energy Agency (IAEA), Vienna, Austria.

2 Title 49, Code of Federal Regulations, Parts 100 - 199, United States of America.

CERTIFICATE USA/0502/S, REVISION 2

This certificate is issued in accordance with paragraph 703 of the IAEA Regulations and Section 173.476 of Title 49 of the Code of Federal Regulations, in response to the petition and information dated October 25, 2000 submitted by AEA Technology, Burlington, MA, and in consideration of other information on file in this Office.

Certified by:

Robert A. McGuire
Associate Administrator for
Hazardous Materials Safety

NOV - 1 2000
(DATE)

Revision 2 - Issue to correct typographical errors on previous revision.

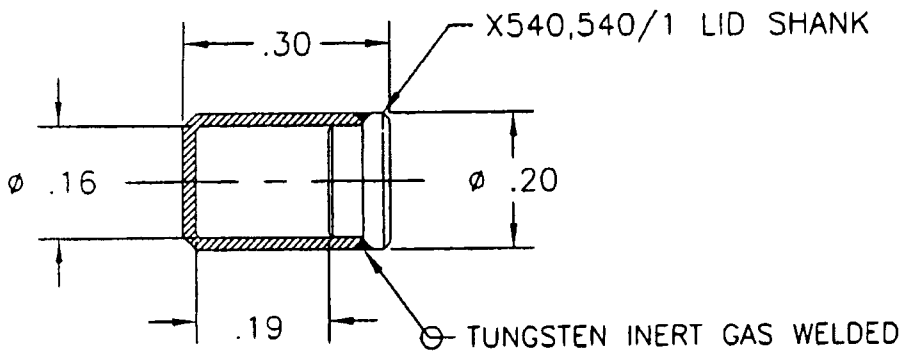

MODEL	MATERIAL
X540	316L STAINLESS STEEL
X540/1	TITANIUM

NOTES:

1. INTERNAL VOID TO BE 0.010 mL OR GREATER.
2. MATERIAL: SEE TABLE
3. INNER CAVITY DIMENSIONS MAY VARY. METALLIC SPACERS, SPRINGS AND GUARDS WHICH SECURE AND/OR LOCATE THE RADIOACTIVE MATERIAL WITHIN THE CAPSULE MAY BE USED.
4. MINIMUM WALL THICKNESS TO BE 0.009.

UNLESS OTHERWISE SPECIFIED:
ALL DIMENSIONS ARE INCHES AND REFERENCE.

AEA TECHNOLOGY QSA
40 NORTH AVE, BURLINGTON, MA 01803

DESCRIPTIVE DRAWING

DESCRIPTION	APPROVALS	DATE	LTR
REMOVED X54	[signature] (MLT 14 Aug 00)		D
CONSOLIDATED CAPSULES	MLT / SG	03AUG00	C

TITLE X540 CAPSULE SERIES

SIZE A | DWG. NO. R87527 | REV D

SCALE: NONE | SHEET 1 OF 1