U.S. Department
of Transportation

**Research and
Special Programs
Administration**

400 Seventh Street, S.W.
Washington, D.C. 20590

FEB 23 2001

Attention: Registered users of USA/0078/S

Enclosed is the latest revision of our Certificate of Competent Authority No. USA/0078/S for the Gulf Nuclear Model CSV source capsule. Since the Gulf Nuclear corporation no longer manufactures radioactive sources, I believe this certificate should be modified to restrict its application to "use only" and should be discontinued after a reasonable service life of the capsule has expired. If you believe such a decision is incorrect (i.e. the source is still being manufactured) or if you need any further information on this matter, please contact me at your earliest convenience. I can be reached by phone at 202-366-2993, by fax at 202-366-3753, or by email at rick.boyle@rspa.dot.gov.

Sincerely,

Richard W. Boyle, Chief
Radioactive Materials Branch
Office of Hazardous Materials
Technology

U.S. Department
of Transportation
**Research and
Special Programs
Administration**

400 Seventh Street, S.W.
Washington, D.C. 20590

**IAEA CERTIFICATE OF COMPETENT AUTHORITY
SPECIAL FORM RADIOACTIVE MATERIALS
CERTIFICATE NUMBER USA/0078/S, REVISION 8**

This certifies that the sources described have been demonstrated to meet the regulatory requirements for special form radioactive material as prescribed in the regulations of the International Atomic Energy Agency[1] and the United States of America[2] for the transport of radioactive materials.

1. Source Identification - Gulf Nuclear Model CSV.

2. Source Description - The source described by this certificate is a welded double encapsulation constructed of Type 17-4 stainless steel and measures 5.0 mm to 25.4 mm (0.2 in to 1.0 in) in diameter by 12.7 mm to 76.2 mm (0.5 in to 3.0 in) in length. Construction must be in accordance with either Gearhart Drawing No. 015-2011-039 (attached) or Dresser Atlas Drawing No. 88645 (attached).

3. Radioactive Contents - This source contains any one of the following radionuclides, with activity not to exceed: 111 GBq (3 Ci) Thulium-170 as an oxide; 370 GBq (10 Ci) Cesium-137 as ceramic pellets; 185 GBq (5 Ci) Cobalt-60 as metal; 74 GBq (2 Ci) Americium-241 as an oxide; or 1.85 GBq (0.05 Ci) Radium-226 as a sulfate.

4. Quality Assurance - Records of Quality Assurance activities required by Paragraph 209 of the IAEA regulations[1] shall be maintained and made available to the authorized officials for at least three years after the last shipment authorized by this certificate. Consignors and consignees in the United States exporting or importing shipments under this certificate shall satisfy the requirements of Subpart H of 10 CFR 71.

5. Expiration Date - This certificate expires April 1, 2006.

---

1 "Safety Series No. 6, Regulations for the Safe Transport of Radioactive Materials, 1985 Edition, as amended 1990" , published by the International Atomic Energy Agency (IAEA), Vienna, Austria.

2 Title 49, Code of Federal Regulations, Parts 100 - 199, United States of America.

CERTIFICATE USA/0078/S, REVISION 8

This certificate is issued in accordance with paragraph 703 of the IAEA Regulations and Section 173.476 of Title 49 of the Code of Federal Regulations, in response to the petition and information dated December 4, 2000 submitted by Tuboscope, Houston, TX, and in consideration of other information on file in this Office.

Certified by:

Robert A. McGuire
Associate Administrator for
Hazardous Materials Safety

FEB 23 2001
(DATE)

Revision 8 - Issued to extend the expiration date.

015-2011-039

MODIFY $\frac{1}{2} \times \frac{3}{4}$ SOCKET HEAD CAP SCREW
AS SHOWN 18 THDS PER INCH
(STAINLESS STEEL)

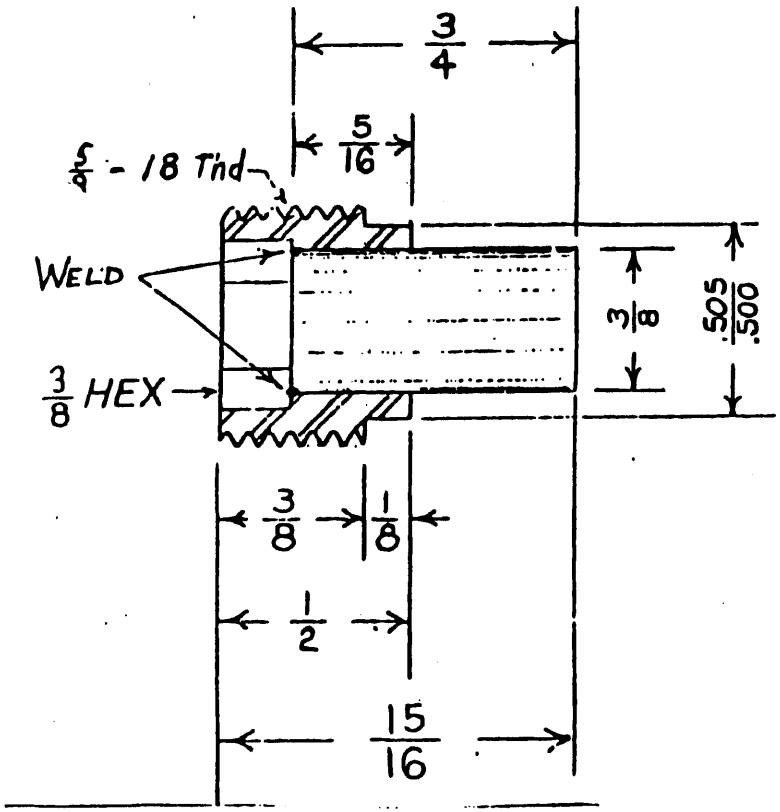

SOURCE STRENGTH:

CESIUM 137
2.1 CURIE +200 MILLICURIE
-100 MILLICURIE

PRESS FIT INTO SCREW

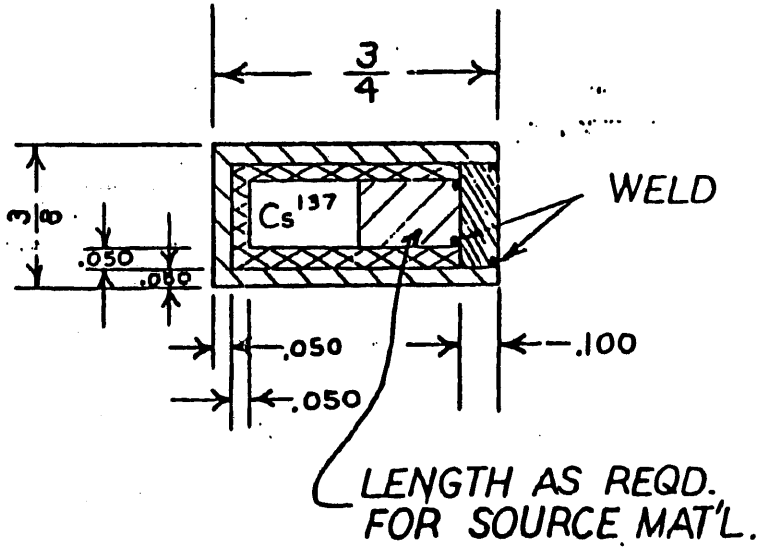

NOTES:

1. MAT'L.: 17.4 PH/316 S.S.

003-4703-800
N/A: 003-4703-000

TOLERANCES UNLESS NOTED OTHERWISE
(DECIMAL ±.005) (FRACTIONAL ±1/64) (ANGULAR ±½°)
DIAMETERS CONCENTRIC TO ±_____ T.I.R.
FINISH MARK √ INDICATES POLISH FINISH
BREAK SHARP EDGES WITH 1/64 RADIUS

GEARHART INDUSTRIES, INC.
BOX 1936 • FORT WORTH, TEXAS 76101

3	ECO 11737	R	10-27-83	
2	ECO 9713		5-27-8	
1	ECO # 2493	A.P.	10-6-74	

MATL: 1 (VFM)
HEAT TREAT.: N/A
SCALE: 2/1
DRAWN BY: J T
DATE: 11-11-71
APPROVED BY:

COMPENSATED DENSITY SOURCE

2C CESIUM 137

Title Dresser Atlas 2 Ci Cesium 137 Source

Date Oct 1980

Drawing No. 88645

sheath drg A88643

cell A88644

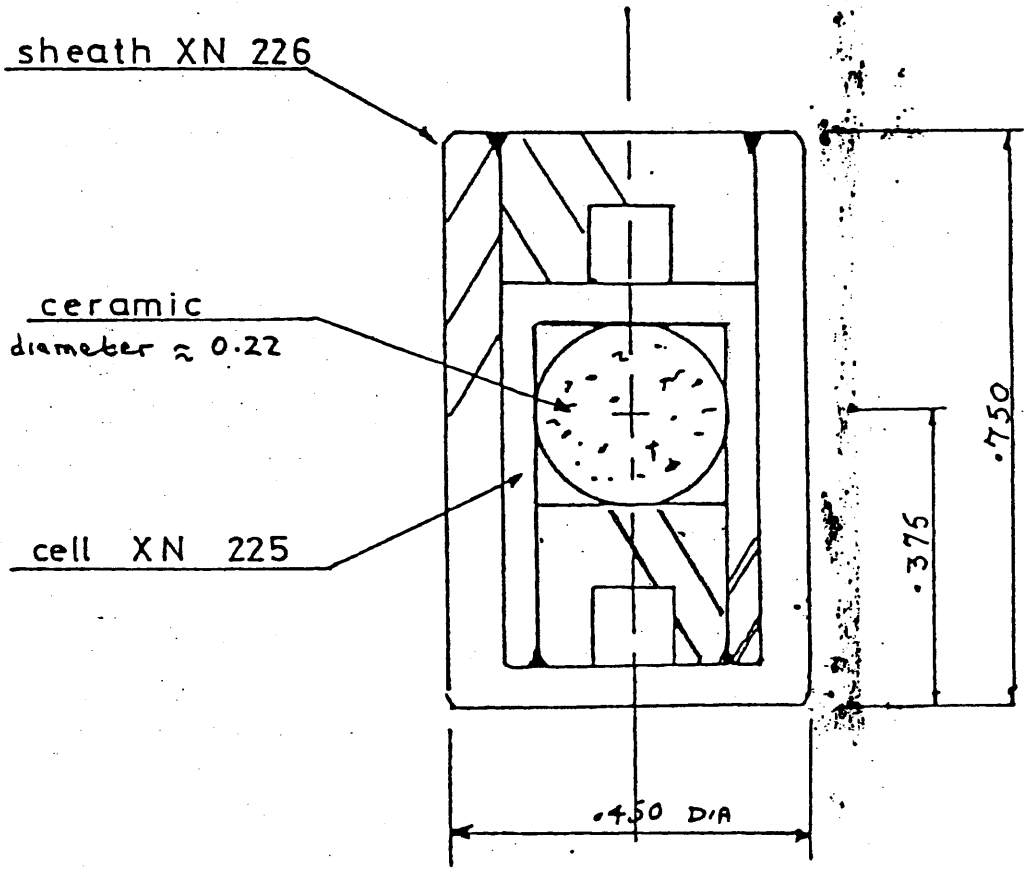

Dims inches | Scale 4:1