U.S. Department of Transportation
Research and Special Programs Administration

400 Seventh Street, S.W.
Washington, D.C. 20590

IAEA CERTIFICATE OF COMPETENT AUTHORITY
SPECIAL FORM RADIOACTIVE MATERIALS
CERTIFICATE NUMBER USA/0159/S, REVISION 4

This certifies that the sources described have been demonstrated to meet the regulatory requirements for special form radioactive material as prescribed in the regulations of the International Atomic Energy Agency[1] and the United States of America[2] for the transport of radioactive materials.

1. Source Identification - E.I. DuPont/NEN Model NER-478C.

2. Source Description - The source is manufactured of 316L stainless steel, tungsten-inert-gas welded right circular cylinder measuring approximately 7.9 mm (0.31 in.) to 15.2 mm (0.60 in.) in diameter by 5.1 mm (0.20 in.) to 8.1 mm (0.32 in.) in height and constructed to NEN control specification and Drawing No. 313-301 (attached).

3. Radioactive Contents - Not more than 0.074 TBq (2.0 Ci) of Americium-241 as a vitreous ceramic.

4. Quality Assurance - Records of Quality Assurance activities required by Paragraph 209 of the IAEA regulations[1] shall be maintained and made available to the authorized officials for at least three years after the last shipment authorized by this certificate. Consignors and consignees in the United States exporting or importing shipments under this certificate shall satisfy the requirements of Subpart H of 10 CFR 71.

5. Expiration Date - This certificate expires June 30, 2002.

This certificate is issued in accordance with paragraph 703 of the IAEA Regulations and Section 173.476 of Title 49 of the Code of Federal Regulations, in response to the petition and information dated April 8, 1997 submitted by Du Pont Merck Radiopharmaceuticals, North Billerica, MA, and in consideration of other information on file in this Office.

Certified by:

Alan I. Roberts
Associate Administrator for Hazardous Materials Safety

JUN 16 1997
(DATE)

Revision 4 - Issued to update to the IAEA 1985 regulations, to add drawing, and to extend the expiration date.

---

1 "Safety Series No. 6, Regulations for the Safe Transport of Radioactive Materials, 1985 Edition, as amended 1990", published by the International Atomic Energy Agency (IAEA), Vienna, Austria.

2 Title 49, Code of Federal Regulations, Parts 100 - 199, United States of America.

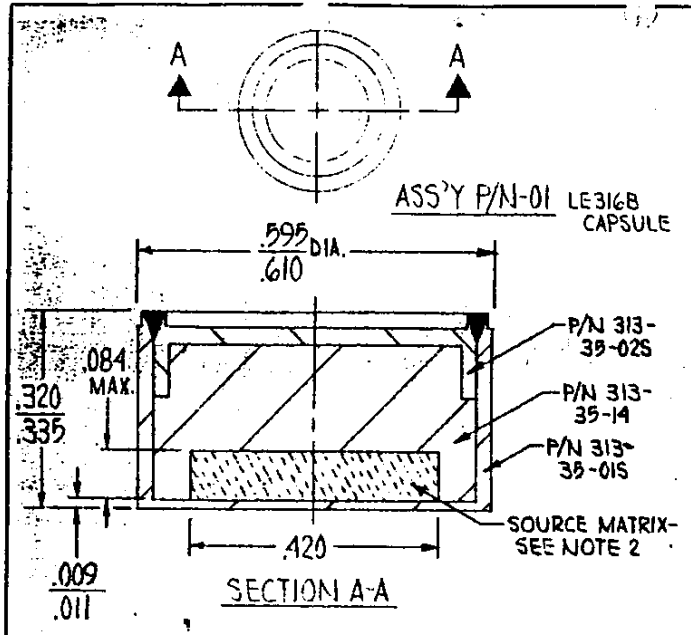

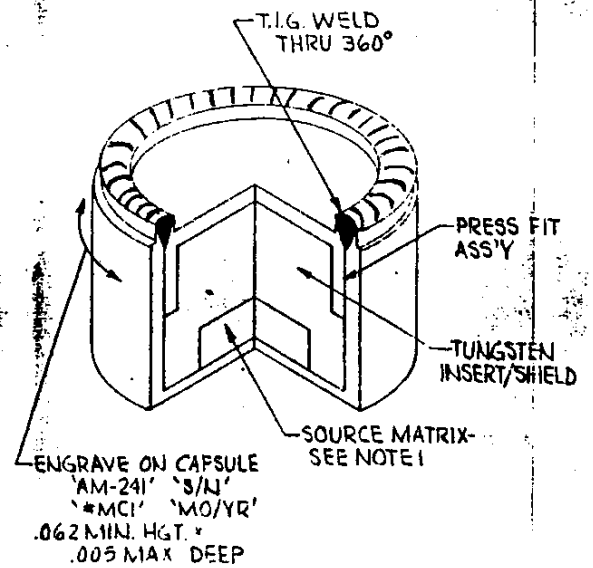

NOTES

1. SOURCE MATRIX CONSISTS OF AM-241 AS A VITREOUS CERAMIC AND FUSED TO THE TUNGSTEN INSERT, FORMING A CERAMIC GLAZE.
2. MAXIMUM ACTIVITY CONTENT:
   LE316 2000 MCI.
   LE316A 2000 MCI.
   LE316B 2000 MCI.
3. NOMINAL ACTIVITY TOLERANCE +15%, -10%.
4. LEAK TEST PER ANSI N542-1977 PROCEDURES A2.1.1 SMEAR TEST, A2.1.3 IMMERSION TEST, AND A2.2.1 BUBBLE TEST. SEE NSQA TEST DIRECTIVE 003. LIMIT 1×10^{-3} μCI.
5. ANSI N542-1977 PERFORMANCE CLASSIFICATION C64444.
6. D.O.T. 'SPECIAL FORM' MAT'L PER 10CFR71.4.

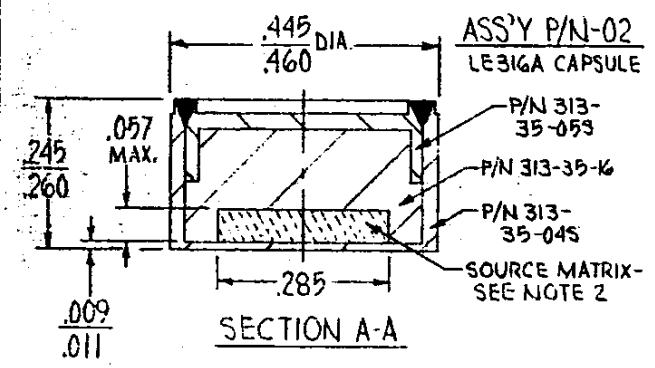

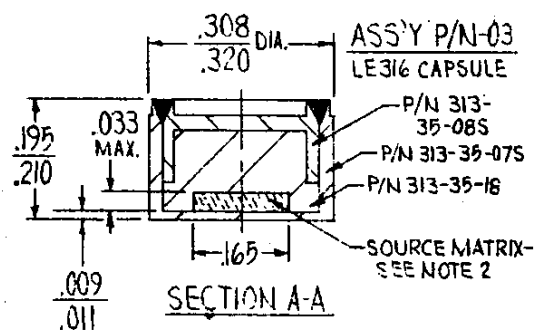

NEN CONTROL SPECIFICATION

MATERIAL SPECIFICATIONS	FRACTIONAL	DECIMAL	ANGULAR	NEW ENGLAND NUCLEAR CORP. BOSTON, MASS.	
CRES 316L STN. STL.	± 1/64	±.005	±30'		
DRAWN J. SUMARES	REV.	DATE 8-29-78	SCALE N.T.S.	NAME NER-478C AM-241 L.E. PHOTON SOURCE	DRAWING NO. 313-301
CHECKED		DO NOT SCALE DRAWING			
APPR'D					

WAKEFIELD P-1848