U.S. Department of Transportation

Pipeline and Hazardous Materials Safety Administration

East Building, PHH-23
1200 New Jersey Ave, SE
Washington, D.C. 20590

IAEA CERTIFICATE OF COMPETENT AUTHORITY
SPECIAL FORM RADIOACTIVE MATERIALS

CERTIFICATE USA/0823/S-96, REVISION 2

This certifies that the source described has been demonstrated to meet the regulatory requirements for special form radioactive material as prescribed in the regulations of the International Atomic Energy Agency[1] and the United States of America[2] for the transport of radioactive material.

1. Source Identification - ORNL Pu Cylindrical Source.

2. Source Description - Cylindrical single encapsulation made of Type 304L stainless steel and tungsten inert gas seal welded. An inner cylindrical assembly made of Type 304L stainless steel with a press fit lid contains the radioactive contents. Approximate exterior dimensions are 22.4 mm (0.88 in.) in diameter and 58.4 mm (2.3 in.) in length. Construction shall be in accordance with attached UT-Battelle Drawing No. N3E020995A537, Rev. A, Sheet 1 of 3.

3. Radioactive Contents - No more than 101 GBq (2.73 Ci) of Plutonium-238, 35.7 GBq (0.965 Ci) of Plutonium-239, 131 GBq (3.54 Ci) of Plutonium-240, 608 GBq (16.4 Ci) of Plutonium-241, 2.33 GBq (63 mCi) of Plutonium-242, and 10.4 MBq (0.281 mCi) of Plutonium-244. The source contents may be a mix of the plutonium isotopes, but shall not exceed 15.54 grams of total plutonium. The Pu-238, Pu-239, Pu-240, Pu-241, Pu-242, and Pu-244 are in solid oxide form.

4. Management System Activities - Records of Management System activities required by Paragraph 306 of the IAEA regulations shall be maintained and made available to the authorized officials for at least three years after the last shipment authorized by this certificate. Consignors in the United States exporting shipments under this certificate shall satisfy the requirements of Subpart H of 10 CFR 71.

---

[1] "Regulations for the Safe Transport of Radioactive Material, 2012 Edition, No. SSR-6" published by the International Atomic Energy Agency (IAEA), Vienna, Austria.

[2] Title 49, Code of Federal Regulations, Parts 100-199, United States of America.

CERTIFICATE USA/0823/S-96, REVISION 2

5. Expiration Date - This certificate expires on June 30, 2027. Previous editions which have not reached their expiration date may continue to be used.

This certificate is issued in accordance with paragraph(s) 804 of the IAEA Regulations and Section 173.476 of Title 49 of the Code of Federal Regulations, in response to the June 10, 2022 petition by Department of Energy, Washington, DC, and in consideration of other information on file in this Office.

Certified By:

for William Schoonover
Associate Administrator for Hazardous Materials Safety

June 27, 2022
(DATE)

Revision 2 - Issued to revise the authorized radioactive contents.

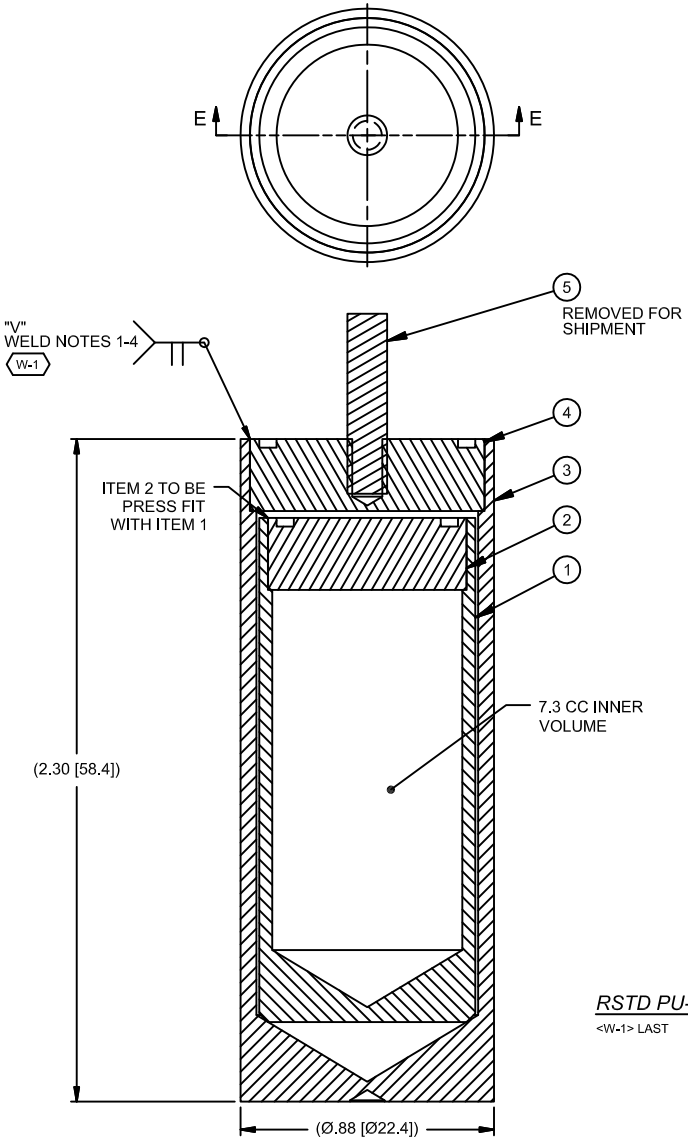

SECTION E-E

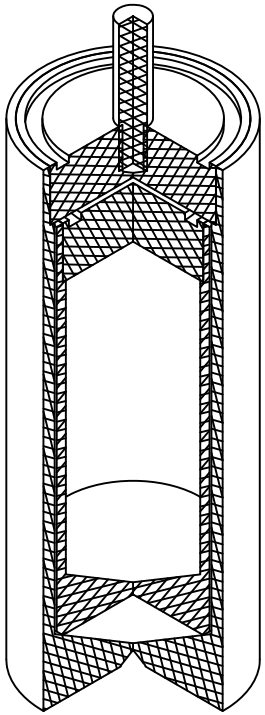

RSTD PU-CYLINDER SFC

<W-1> LAST

PARTS LIST

ITEM	QTY	DESCRIPTION	NOTE	MATERIAL / VENDOR	MFG. PN / DET. DWG #
1	1	INNER CAPSULE BODY		SST 304L	N3E020995A537 SHT 2
2	1	INNER CAPSULE TOP		SST 304L	N3E020995A537 SHT 2
3	1	OUTER CAPSULE BODY		SST 304L	N3E020995A537 SHT 3
4	1	OUTER CAPSULE TOP		SST 304L	N3E020995A537 SHT 3
5	1	SCREW STUD, 6-32 UNC, 5/8 LG		SST 300 SERIES	

GENERAL NOTES:

1. [XX] ALTERNATE UNITS IN mm.
2. ITEM 3 AND ITEM 4 (OUTER CAPSULE BODY AND OUTER CAPSULE TOP) SHALL BE OF THE SAME HEAT BASE METAL WITH <0.05% SULFUR CONTENT.
3. ITEM 3 AND ITEM 4 ARE TO BE DELIVERED TO ORNL WITH THE CMTR HEAT # CLEARLY LABELED ON THE PART BAG OR SIMILAR CONTAINER.

WELD NOTES:

1. ALL SST WELDS PER ORNL WPS-GT88-A(PP)
2. < W- > INDICATES WELD IDENTIFICATION NUMBER. NO WELD SEQUENCE IMPLIED
3. WELD INSPECTION: "V" - VISUAL PER ORNL NDE-21 APPENDIX F.
4. WELD SIZE TO BE >0.025" AND <0.065"
5. LEAK TEST TO 1.3 X 10^{-4} STD. ATM -CC/S @ 25°C PER FHRD-NDE-70.

QUALITY VERIFICATION

MECHANICAL AND STRUCTURAL

QV CLAUSE	DOCUMENTS REQUIRED	PROC. NO.	PART NO.
303	MAT'L MILL TEST REPORT (CERT)		1-4
325	MAT'L SELLER CERT		5
326	SPECIAL MAT'L INSP. REPORT		
205	MFG. INSP. AND TEST PLAN		
312	FIELD INSP. & TEST PLAN		
314	MATERIAL MARKING		
321	WELD AND BRAZE INSP. REPORT	WELD NOTES 1-4	INDICATED
322	HEAT TREAT REPR.(W/CHART)		
310	LEAK TEST REPORT		
315	CLEANING CERT		
318	DEVIATION REQUEST	SBMS SA DEVIATION CONTROL	✓
319	NONCONFORMANCE REPORT	SBMS SA NONCONFORMANCE CONTROL	✓
323	DIMENSIONAL REPORT		
330	FUNCTIONAL TEST REPORT		
333	IDENTIFICATION & CONTROL OF SUSPECT/COUNTERFEIT PARTS		
★	SPECIAL PROCUREMENT REQUIRED	NNFD-10	
100	DOCUMENTATION	FOR ABOVE	

SYMBOL ✓ INDICATES APPLICABLE TO ALL PARTS OR ITEMS.

W. GEORGE ASKEW — QUALITY REPRESENTATIVE

11/8/2016 — DATE

JG	DMc	JAJ	JAK	11/16/16
DSNR	DR	SR1	SR2	DATE
APPROVALS				

DEFAULT STANDARDS UNLESS OTHERWISE SPECIFIED

TOLERANCES:
FRACTIONS ± 1/64
XX DECIMALS ± 0.01
XXX DECIMALS ± 0.005
ANGLES ± 0°–30'
BREAK SHARP EDGES 1/64 MAX.
FINISH = 125 RMS

THIS DRAWING CREATED IN ACCORDANCE WITH ANSI Y14.5M–1994

ALL DIMENSIONS ARE IN INCHES

UT-BATTELLE

NONREACTOR NUCLEAR FACILITIES DIVISION
OAK RIDGE NATIONAL LABORATORY

Operated by UT-Battelle for the Department of Energy under U.S. Government contract DE-AC05-00OR22725• Oak Ridge, Tennessee

TITLE: RSTD PU-CYLINDER SPECIAL FORM CAPSULE (SFC)

SIZE	DWG NO.	REV
A	N3E020995A537	A
	SCALE: 1.5X — SHEET 1 OF 3	

U.S. Department of
Transportation

**Pipeline and
Hazardous Materials
Safety Administration**

**East Building, PHH-23
1200 New Jersey Ave, SE
Washington, D.C. 20590**

CERTIFICATE NUMBER: USA/0823/S-96

ORIGINAL REGISTRANT(S):

Department of Energy
U.S. Department of Energy
1000 Independence Ave, SW
EM-60
Washington, DC, 20585
USA